IEEE Access
Multidisciplinary ⋮ Rapid Review ⋮ Open Access Journal

Received September 11, 2018, accepted October 6, 2018, date of publication October 11, 2018, date of current version November 8, 2018.

Digital Object Identifier 10.1109/ACCESS.2018.2875487

A Review of EEG and MEG Epileptic Spike Detection Algorithms

FATHI E. ABD EL-SAMIE[1], TURKY N. ALOTAIBY[2], MUHAMMAD IMRAN KHALID[3], SALEH A. ALSHEBEILI[3], AND SAEED A. ALDOSARI[3]

[1]Faculty of Electronic Engineering, Menoufia University, Menouf 32952, Egypt
[2]KACST, Riyadh 11442, Saudi Arabia
[3]KACST-TIC in Radio Frequency and Photonics for the e-Society (RFTONICS), Department of Electrical Engineering, King Saud University, Riyadh 11421, Saudi Arabia

Corresponding author: Turky N. Alotaiby (totaiby@kacst.edu.sa)

This work was supported by the KACST-Lockheed Martin University Funding Program.

ABSTRACT Epilepsy is one of the most serious disorders that affect patients' daily lives. When seizures occur, patients cannot control their behaviors, which can lead to serious injuries. With the great advances in recording both electroencephalogram (EEG) and magnetoencephalography (MEG) signals, it has become possible to analyze these signals in an automated manner for information extraction to help in seizure detection and prediction. Both EEG and MEG recordings of epilepsy patients contain spikes that can be used for the localization of epileptogenic zones, efficient onset detection, and even, in some cases, prediction. In this paper, we consider the characteristics of EEG and MEG spikes, present a discussion of the importance of spike detection in both signal modalities, and provide a review of spike detection algorithms. Since EEG signals have been widely used for decades, most of the algorithms presented in this paper cover the EEG spike detection methods. Few works in the literature are dedicated to MEG spike detection. Nevertheless, we assert that with some modifications, a considerable number of EEG spike detection algorithms can be applied to MEG signals. We classify the spike detection algorithms according to the domain used for processing the signal. Finally, we conclude with future research directions and open problems in this area.

INDEX TERMS EEG, MEG, spike detection, wavelet transform, Fourier transform, feature extraction.

I. INTRODUCTION

Epilepsy affects approximately 1% of the global population, and those affected suffer from reduced work efficiency and have difficulty coping with normal daily life [1]. With the great advances in medical technology, it has become possible to record both EEG and MEG signals and to process these signals in order to extract useful information about epilepsy patients. EEG signals are easy to record with simple headsets, while MEG signals require special setups. EEG signals are classified into two types: scalp EEG and intracranial EEG (iEEG). Scalp EEG signals are recorded non-invasively from the scalp surface using external electrodes, with precautions taken to decrease impedance and enhance conductivity [2]. The International 10-20 system is widely used for this purpose [3]. To acquire high-resolution EEG signals, a dense array EEG (dEEG) with 256 electrodes is used [4]. iEEG signals, on the other hand, are collected from electrodes placed on the brain,s surface during surgery.

MEG signals were first recorded by Cohen in 1968 using a copper induction coil detector. To reduce the noise of these signals and yield clean MEG signals, superconducting quantum interference device (SQUID) detectors have been used [5]–[7]. Due to recent advances in MEG technology, about 300 sensors are now used to obtain a view of whole-head activities, leading to multi-channel MEG signals. MEG signals are very weak compared to the ambient noise level; hence, a shielding process is required for MEG signal recording.

Both EEG and MEG signals result from the same neurophysiological processes, but MEG signals are less distorted, leading to better spatial resolutions. An important difference between EEG and MEG signals is that the decay rate of the magnetic field is higher than that of the electric field [8]–[10].

This paper is concerned with the problem of detecting interictal spikes (which fall in the period between seizures) in both EEG and MEG signals. Both types of signals are of a multi-channel nature. Therefore, the spike detection algorithm may work on a single- or multi-channel basis. Note that EEG/MEG spikes can be viewed as abnormalities in the signals under consideration. Consequently, most of the

anomaly-detection techniques can be used for spike detection. Although most of the work in this field has been devoted to EEG spike detection, with some modifications, it can be extended to the MEG spike detection case.

A. MOTIVATION

This review is motivated by the fact that EEG/MEG spike detection methods play a vital role in the pre/post surgical assessment process. EEG is an important tool in epileptic seizure source localization (irritative zone) [11], [12]. MEG spikes, on the other hand, result from abrupt changes in the electric current at a certain spot in the brain. Therefore, MEG spike detection is a fundamental step in epileptic seizure source localization [13], [14]. Methods based on equivalent current dipole (ECD) and standardized low-resolution brain electromagnetic tomography have been used effectively for spike source localization [15]. Spike detection from MEG recordings may be helpful for focal cortical dysplasia (FCD) patients, as it is necessary for epileptic surgeries [16]. Evidence of a relation between FCD and short and steep MEG spikes was also found. Source localization is an important presurgical process that is also useful as a postsurgical process to assess the surgical outcome and its effect on seizure activity and strength [17].

Simultaneous spike detection from both EEG and MEG signals can reveal more information than either alone [18]–[20]. Note that epileptic spikes could be seen in MEG or EEG alone, as they have different sensitivities with respect to the location and orientation of epileptic activity [18].

EEG signals are frequently used to measure the large-scale dynamics of the human brain, which are related to the spike rates of the cortical neurons in the brain. Hence, spike detection algorithms are needed to determine the spike rate in EEG signals [21]. EEG spike detection can be used with functional magnetic resonance imaging (fMRI) to localize spike sources in a process called EEG-informed fMRI [22], [23]. It is a new trend in brain discovery for epilepsy patients, and it can help to determine where and how spike-and-wave activities originate. Itabashi *et al.* [24] showed that spike detection from both EEG and MEG can help to determine some abnormalities in magnetic resonance (MR) images in the treatment of FCD.

B. RESEARCH METHODOLOGY

The detection algorithms often consist of three main steps: 1) pre-processing to enhance signal-to-noise ratio (SNR) or certain features, and/or to reduce signal dimensionality, 2) features extraction, and 3) classification. In this paper, we consider signal features as the basis for reviewing the spike detection algorithms, because the features play a vital role in determining the performance of a detection algorithm. Therefore, spike detection methods based on time-, frequency-, and wavelet-domain features are considered. Due to the large number of publications in this area, we select representative methods of the concept of spike detection in each of the three domains. Performance metrics adopted in the literature for the evaluation of most spike detection algorithms are considered in this review. These metrics are sensitivity, specificity, accuracy, and precision defined, respectively, as follows [25]:

$$Sensitivity = \frac{TP}{TP + FN} \times 100 \quad (1)$$

$$Specificity = \frac{TN}{TN + FP} \times 100 \quad (2)$$

$$Accuracy = \frac{TP + TN}{TP + TN + FP + FN} \times 100 \quad (3)$$

$$Precision = \frac{TP}{TP + FP} \times 100 \quad (4)$$

where true positive (TP) is the number of spike epochs determined by both the algorithm and experienced physicians, false negative (FN) is the number of spike epochs missed by the algorithm but determined by experienced physicians, true negative (TN) is the number of non-spike epochs recognized by both the algorithm and experienced physicians, and false positive (FP) is the number of non-spike epochs recognized as spikes by the algorithm but not by experienced physicians.

The paper is organized as follows. We first describe the EEG and MEG spike characteristics in Section 2. Then, we cover time-, frequency-, and wavelet-domain spike detection methods in Section 3. Finally, Sections 4 and 5 discuss the findings of the present work and give concluding remarks, respectively.

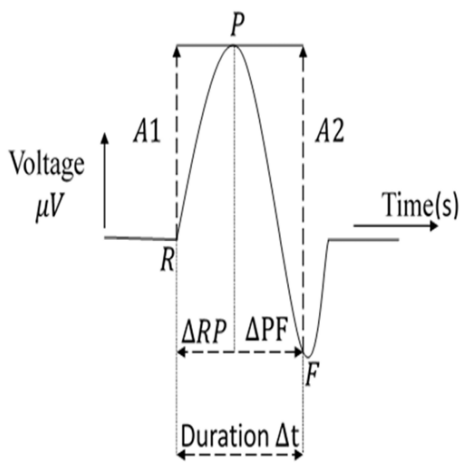

FIGURE 1. Simulated interictal EEG spike morphology [26].

II. EEG AND MEG SPIKE CHARACTERISTICS

An interictal EEG spike is an RPF wave with a shape as shown in Fig. (1). In the 10-20 system (EEG) recordings, epileptic spikes are typically surface negative deflections caused by the orientation of the cortical surface. The spike maintains continuity during the narrow and wide segments. Both the rising and falling slopes are steep. The rising slope is measured between R and P, and the falling slope is measured between P and F. The peak of the spike results from the polarity change in the voltage of the recorded EEG signal.

The spike duration ranges from 20 to 70 ms. The amplitude of a spike is greater than 20 μV, and the max amplitude of a spike is at least 1.5 times the background signal level. The spikes do not occur in isolation, which means that multi-channel activity may be reported [26].

Slow waves may follow spikes, and these waves can be used to verify the existence of spikes. Spike-like activities or artifacts, such as the saccadic spike artifact, may also occur in some channels, and these activities need to be filtered out to reduce false detections [27].

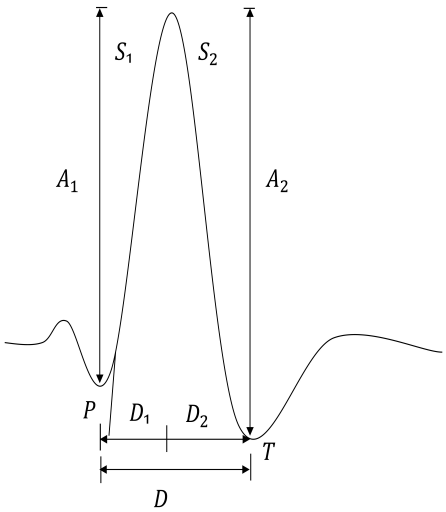

FIGURE 2. An MEG spike with its morphological feature's modified from [28].

The MEG spike shown in Fig. (2) is a PRT wave having duration D (=PT) ranging from 27 ms to 120 ms. It has several features [28]:

1. Duration D
2. Duration D_2 of the trailing edge ranges from 15 ms to 67 ms,
3. Slope S_1 of the rising edge ranges from 0.11 PT/ms to 0.31 PT/ms,
4. Slope S_2 of the trailing edge ranges from -0.09 to -0.29,
5. Amplitude A_1 is of 2.1 PT on average and A_2 is of 2.5 PT on average,
6. Degree of curvature, C (i.e., sharpness of spike), which can be estimated from the second derivative, and it lies in the range of 0.023 PT/ms^2 to 0.038 PT/ms^2.

III. AUTOMATED SPIKE DETECTION METHODS

Stevens *et al.* [29] presented the first attempt of automatic epileptic spike recognition over a long recording. Since then, many epileptic spike detection methods have been developed. However, such methods are not as reliable as the visual scanning of EEG/MEG recordings by expert neurologists. Next, we review spike detection methods developed mainly based on time-, frequency-, and wavelet-domain features. We classify these methods into classes based on common principles.

A. TIME-DOMAIN METHODS

Most of the research work on spike detection from EEG and MEG signals has been performed in the time domain. In the next sub-sections, we categorize these methods into classes based on common principles.

1) FEATURE-BASED METHODS

All methods in this category rely on extracting discriminative features from the EEG signals in time domain. Gotman and Gloor [30] and Gotman *et al.* [31] developed an automatic spike-recognition method based on breaking down the EEG signal into half-waves and extracting few features such as the amplitude, duration, and sharpness. De Oliveira *et al.* [32] implemented a spike detection method in a hybrid microcomputer system using a set of features including relative amplitudes, slope, curvature attribute of the spike, and three time durations. In [33], Gotman and Wang validated their state-dependent method [34] in which the authors tried to improve the accuracy of their algorithm [31] by introducing a state-classification stage, which classified the EEG into five states (active wakefulness, quiet wakefulness, desynchronized EEG, phasic EEG, and slow wave), before applying their algorithm. They achieved 0.79 false-positive spikes/min. Keshri *et al.* presented a time-domain deterministic finite automata (DFA)-based approach for EEG spike detection called DFAspike. It is a simple model adopting only the amplitude and slope of EEG signals as the features controlling the state transitions [35]. The authors adopted a 13-state transition diagram to describe the possible cases of EEG signals, where the spike state corresponded to sharp amplitude and large slope transitions, and they achieved a 99.13% spike-recognition rate.

Wang *et al.* [36] suggested the use of both high- and low-density electrodes to detect interictal spikes. A scenario with 76 electrodes was implemented to obtain high-density EEGs, which were further decimated to low density and compared to a low-density EEG scenario. Co-incidence of spikes was used as evidence for EEG spike detection. The considered spikes were those with amplitudes satisfying certain peak levels and certain durations. This approach was used with a numerical technique and MR images to localize epileptogenic brain signals from non-invasive scalp EEG recordings for patients with medically intractable epilepsy. The feasibility of using dEEG for the localization of spike sources in the brain was investigated by Yamazaki *et al.* [11]. A 256-channel dEEG was used for spike detection and was also decimated to a 19-channel scenario to simulate the traditional EEG. Spike-source localization results with dEEG were better than those obtained with traditional EEG. The results with dEEG are comparable to those obtained with iEEG.

Source localization is a very important application of spike detection for the determination of epileptogenic foci for accurate presurgical intervention and for determining the degree of postsurgical improvement for each patient. Countin-Churchman *et al.* [37] used simple amplitude- and

duration-based time-domain methods for EEG spike detection. The objective of their study was to determine the percentage of spike activities localized within the site of resection during the onset of seizures. Fourteen patients had 90-100% spikes within the site of resection.

2) METHODS BASED ON ARTIFICIAL INTELLIGENCE

Methods in this category have a common thread of using either a classifier or a clustering technique. Webber *et al.* [38] developed an artificial neural network-based approach for epileptiform discharge detection. They segmented the EEG signal into 2-second epochs and extracted spike and context parameters from each epoch. Their method consisted of two stages: spike candidate selection and spike detection using neural network stages. This approach achieved a sensitivity of 73% and false positive rate of 6.1 spikes/min. Özdamar and Kalayci [39] investigated the use of raw EEG data for spike detection. They used signal samples as inputs to a neural classifier. However, this method did not perform well and it requires a huge computational complexity.

Wilson *et al.* [40] developed a spike detection method using a multiple monotonic neural network (MMNN). Their method consisted of a spike candidate function, which ruled out any event that was clearly not a spike. Then, a candidate spike was presented to a number of MMNNs whose outputs were presented finally to a final MMNN to determine the overall perception of the spike. They tested their method on 50 subjects (40 epilepsy patients and 10 healthy subjects), verified it on 10 epilepsy subjects, and reported a correlations of 85% and 76% for the two dataset respectively.

Another approach for spike detection is to use features extracted from the time-domain signals and then apply a classification step. Gabor and Seyal [41] presented a time-domain spike detection approach adopting an error-back-propagation feed-forward neural network classifier. The features used for classification were the slopes of the waveforms for all channels in a window of 0.4 ms. The database used for experimentation contained five patients with eight channels. This method achieved a sensitivity of 94.2% with a false-positive rate of 20.9%. Khalid *et al.* [42] also developed a patient-independent MEG spike detection technique based on common spatial patterns (CSPs) as a feature extractor then linear discriminant analysis (LDA) for classification. The performance of this proposed algorithm was evaluated using data of 20 epileptic patients. The overall sensitivity and specificity achieved by the developed algorithm were 91.03% and 94.21%, respectively.

İnan and Kuntalp [43] presented a two-stage spike detection algorithm implementing a neural pre-classifier in addition to a fuzzy c-means (FCM) clustering algorithm. A preprocessing step was applied to data segments. This step included mean removal, determination of peak positions based on signal slope on a point-by-point basis, and artifact rejection when the estimated slopes did not meet specific criteria. In addition, main electricity interference was rejected. Four features were used in this algorithm for a neural pre-classifier: first and second half-wave durations and amplitudes. The pre-classifier aimed at rejecting trivial activities. The final stage depended on FCM to create two clusters containing spike and non-spike data with a membership function of 0.8. This algorithm achieved a sensitivity of 93.3%, a specificity of 74.1 %, and a false-positive rate of 26.4%.

Nonclercq *et al.* [44] presented a time-domain cluster-based spike detection algorithm considering both inter- and intra-patient variations into the spike detection process. The steps of this algorithm are summarized as follows [44]:

1. Detect spikes in the time domain with appropriate amplitudes and duration thresholds.
2. Cluster the detected spikes into different clusters based on their parameters.
3. Use centroids of clusters as templates for further template-matching processes.

This algorithm was tested on data of 20 children and showed a 0.3% increase in sensitivity when compared with the manual scoring of spikes by three EEG experts.

3) METHODS BASED ON PREPROCESSING

Generally, pre-processing is used in signal processing applications for different purposes such as noise reduction, certain activity enhancement, and trend removal. A simple way to detect epileptic EEG spikes is to filter the train of EEG samples to reinforce signal details and then to compute energy where spikes have higher values than background activities. Qian *et al.* [45] developed such a method. In their method, an EEG signal was passed through a difference filter, defined as

$$d(n) = s(n) - s(n-k) \tag{5}$$

where k determines the value of frequency range to be emphasized. The final output, $y(n)$, was obtained by multiplying the current output of the difference filter with the m sample's earlier output; that is,

$$y(n) = d(n) \times d(n-m) \tag{6}$$

The threshold used for detection was estimated using the relation

$$Threshold = 20.5 \times E\left[|y(n)|\right] \tag{7}$$

Azami and Sanei [46] presented three different time-domain spike detection methods: the fractal dimension (FD) method, smoothed nonlinear energy operator (SNEO) method, and standard deviation method. These methods have been investigated in noisy scenarios, with some noise-reduction methods, such as wavelet denoising, Kalman filtering, singular spectrum analysis (SSA), Savitzky—Golay filtering, and empirical mode decomposition (EMD).

The fractal dimension of signals is a statistical measure describing signal similarity over time windows [47], [48]. It can be estimated with several algorithms, such as Katz's algorithm as follows [47]:

$$D = \frac{log\,(L/a)}{log\,(d/a)} \tag{8}$$

where L is the sum of Euclidean distances between the successive points of the sample, a is the average of Euclidean distances between the successive points of the sample, and d is the maximum distance between the first point and any other point of the sample.

The distribution of the fractal dimension variation from window to window is used for spike detection by selecting a proper threshold value as the average of this distribution. The variation of the fractal dimension is estimated as [46]

$$G_i = |D_{i+1} - D_i| \quad i = 1, 2, ..., K - 1 \tag{9}$$

where i is the index of window D and K is the number of windows.

The instantaneous energy of a signal, $x(n)$, can reflect the signal activities. This energy can be measured with a operator called the nonlinear energy operator (NEO) [46]:

$$\psi[x(n)] = x^2(n) - x(n-1)\,x(n+1) \tag{10}$$

This NEO is sensitive to noise; thus, Mukhopadhyay and Ray presented a modified (smoothed) version of this operator called the SNEO by convoluting it with a window [46]:

$$\psi_s[x(n)] = w(n) * \psi[x(n)] \tag{11}$$

The output of this operator is compared with a threshold, T_r [46]:

$$T_r = c\frac{1}{N}\sum_{n=1}^{N}\psi_s[x(n)] \tag{12}$$

where N is the number of samples and c is a scaling factor selected by trials.

Oikonomou *et al.* [49] presented a Kalman filtering method to enhance EEG signals prior to spike detection. The Kalman filter in this method works as a low-pass filter. The objective of this method is to increase the SNR of the EEG signal, which is defined as the ratio of the peak-to-peak amplitude of the spike to the root mean square (RMS) of a window containing 35 samples on either side of the spike. A simple spike detection approach was adopted in this paper based on thresholding, with the threshold equal to 1.5 times the mean absolute value of the background activity. The enhancement with the Kalman filter succeeded in reducing the false-positive rate while keeping acceptable detection accuracy. This method achieved an SNR enhancement of 133% with a 52% reduction in false-positive rate.

4) METHODS BASED ON SUB-BAND DECOMPOSITION

Generally, EEG signals can be analyzed to different sub-bands such as delta, theta, alpha, beta, and Gamma. Certain activities of these EEG signals may appear strongly in some of these sub-bands. This makes the sub-band decomposition a powerful tool in analyzing EEG signals. Bourien *et al.* [50] presented a multi-channel epileptic spike detection method, that depended firstly on filtering the EEG signals to obtain a gamma band from 20 to 80 Hz to reinforce spikes as much as possible. They adopted the Page-Hinkley test for spike detection. This test works by detecting any transient changes in the local mean of the filtered signal, and it assumes that the mean in the absence of abnormal activities is known. In this method, the synchronous activities in parallel channels are grouped into sets. The positions of these sets on the time scale are constructed in a matrix, which is later transformed into a database. The detected spikes on a multi-channel basis are extracted and displayed for specialists through a data-mining algorithm. The work presented by Bourien *et al.* is useful in building databases for different patients and extracting similar events for comparison and diagnosis purposes.

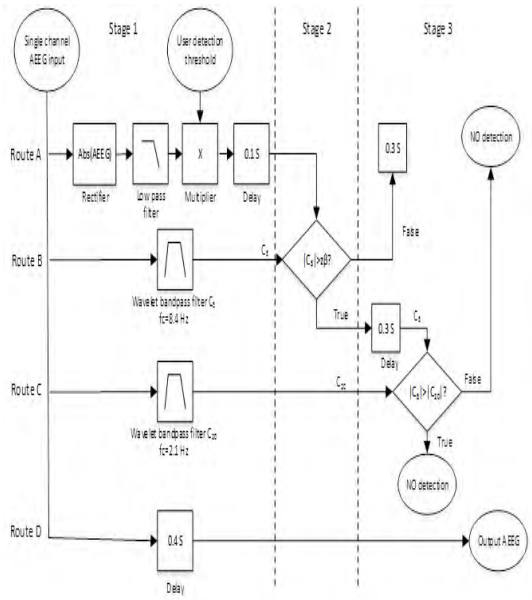

FIGURE 3. Casson and Rodriguez-Villegas method for spike detection, modified from [51].

Casson and Rodriguez-Villegas [51] presented a simple real-time method of detecting spikes from EEG signals suitable for future portable EEG units, known as ambulatory EEG (AEEG). The core of this idea depends on the parallel processing of EEG data through different routes and stages, as shown in Fig. (3). The first stage in Route A comprises low-pass filtering and a 0.1-s delay to perform normalization, and it uses a global threshold for all patients afterwards. Route B in Stage 1 comprises a wavelet bandpass filter C_5 with a center frequency of 8.4 Hz. A comparison is performed between the outputs of the two branches in Stage 2. If the wavelet bandpass filter output exceeds the Route A output, 0.3-sec delay is performed, and the output is compared with that of Route C containing a wavelet bandpass filter C_{20} with a center frequency of 2.1 Hz. If the bandpass filter output is larger, a spike is detected in Stage 3. It is expected that spikes, if they exist, affect the power in the bandwidths of these filters. This method allows a 50% reduction in data storage with up to 90% of important events in EEGs recorded.

Barkmeier *et al.* [52] presented an automatic multi-channel interictal spike detection algorithm that mirrored the expert

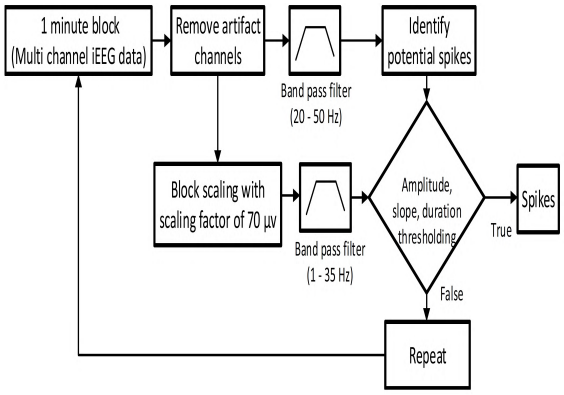

FIGURE 4. Barkmeier *et al.* spike detection method, modified from [52].

reviewers detection method. Three trained electroencephalographers, who participated independently, marked all spikes occurring in all channels in data samples of 10 patients. The block diagram of this spike detection method is shown in Fig. (4). The spike detection algorithm first extracts successive 1-min blocks of multi-channel data and removes artifact channels. Then, a bandpass filter (20−50 Hz) is used to identify the potential spikes in step 2. In step 3, before bandpass filter (1-35 Hz), channels are block scaled with a static scaling factor of 70 μV. The amplitude, slope, and duration of spikes, identified in step 2, are compared with static thresholds (amplitude $>$ 600 μV, slope $>$ 7 μV /ms, duration $>$ 10 ms). Spikes are marked based on these threshold criteria.

5) PERIODICITY-BASED METHODS

EEG signals may contain some periodicity, especially in the presence of spikes, and hence there is a need for periodicity detection techniques for the spike detection purpose. Fürbass *et al.* [53] presented a time-domain multi-channel algorithm for the detection of rhythmic and periodic patterns from EEG signals. This algorithm begins by filtering out all artifacts in the EEG signal channels and band limiting the signals in a 0.4-70 Hz range. The signals with amplitudes above 20 μV and durations between 40 ms and 1.5 s are divided into segments. The segmentation procedure scans for arbitrary peaks (i.e., with amplitudes more than 20 mV). Then, the segments duration below 40 ms and above 1.5 s are discarded. These single-channel segments are combined over several channels to build multi-channel segments. The spike detection algorithm then marks all multi-channel segments as spike, sharp wave, or non-spike segments. This method was tested with 10 patients, and it achieved a detection rate up to 80%.

Herta *et al.* [54] and Koren *et al.* [55] evaluated the sensitivity and specificity of rhythmic and periodic patterns in continuous EEG (cEEG) signals, recorded in intensive care units, with manually annotated EEG segments. They used NeuroTrend software, which automatically detects rhythmic and periodic patterns in surface EEGs and displays the results graphically. The algorithm implemented in NeuroTrend is the time-domain multi-channel algorithm for the detection of rhythmic and periodic patterns from EEG signals described in [44]. NeuroTrend was tested on 68 patients, and it achieved an overall sensitivity and specificity of 94% and 67%, respectively.

6) CONVOLUTION AND CORRELATION -BASED METHODS

Convolution and correlation are very good tools in measuring the similarity between patterns. They can be used for estimating the similarity between stored and incoming spikes. Karacor *et al.* [56] utilized the concept of Lissajous figures and introduced a new concept of rectons for the detection of interictal EEG spikes. It is known that Lissajous figures can be displayed on oscilloscope screens, if a sinusoidal signal and its shifted form are applied to the x and y channels of the scope. According to the phase difference between the signal and its shifted version, elliptical shapes appear on the scope screen. The Lissajous figures can be represented in a discrete manner as 2-D functions. The recton function is defined as the superposition of discrete Lissajous figures, with each Lissajous figure obtained from the convolution of $x(n)$ and $y(-n)$. The recton is a 2-D matrix in which the sum of the recton elements is equal to the sum of the autocorrelation function elements. For an EEG signal with a spike, the recton matrix has large-value components in the upper-right corner for positive spikes and large-value components in the lower-left corner for negative spikes. This approach is very promising for future EEG spike detection applications.

Lodder *et al.* [57] presented a template-matching approach for EEG spike detection. The idea of this approach is to collect templates for most spike activities from multiple channels of the signals selected by experts. For every incoming data segment to be tested, the correlation coefficient of this segment with the available templates is estimated. Based on the correlation coefficient values, a decision is made as to whether a spike exists. If three or more templates show high correlation with the incoming segment, it is decided that a spike exists. This algorithm was tested with 2,160 templates and 15 records having 241 spikes, and it achieved a sensitivity of 99% with 7.24 false positives/min.

Khalid *et al.* [58] developed a method for spike detection from multi-channel MEG signals in a patient independent setting. It consists of two steps. Amplitude thresholding is first employed to localize abnormalities and identify the channels where they exist. Then, dynamic time warping (DTW) is applied to the identified abnormalities to detect the actual epileptic spikes. The sensitivity and specificity of proposed detection algorithm on 30 epileptic patients are 92.45% and 95.81%, respectively.

Ji *et al.* [59] presented a spike detection algorithm based on the elimination of false positives. This algorithm considered 49 channels from two montages, common average reference (AV) and bipolar (BP), and adopted multi-channel processing. Two types of false positives were identified: 1) those from background EEG activities and 2) those from other EEG activities having similar spatial and temporal characteristics

of spikes. Template matching was used to filter false-positive patterns. This algorithm achieved a sensitivity of at least 92.6% and a false-positive rate of 0.26 min $^{-1}$.

7) STATISTICAL-BASED METHODS

Adjouadi and Ayala [60] presented a statistical time-domain approach to the detection of epileptic spikes accompanied by slow-waves. They selected seven attributes for spike-wave classification: spike amplitude, spike duration, ratio of spike amplitude to background amplitude, ratio of total energy to background energy, ratio of wave energy to spike energy, ratio of total power to background power, and ratio of wave power to spike power. They considered each of these attributes as a random variable obeying the Weibull distribution described by [60]

$$D(x) = 1 - \exp(x/\beta)^{\alpha} \tag{13}$$

where α and β were parameters estimated for each distribution. A descriptive function was defined in terms of these parameters, the output of which determined whether a spike existed.

8) MORPHOLOGICAL-BASED METHODS

Mathematical morphology has found an important role in shape detection and signal- and image-segmentation processes. Liu *et al.* [61] suggested the use of adaptive Gaussian structuring elements to detect both positive and negative spikes. The main morphological operations utilized are defined as follows [61]:

Erosion:

$$(f_i \Theta g)(n) = \min_{m=1,2,\ldots,M} \{f_i(n+m-1) - g(m)\} \tag{14}$$

where $n = 1, 2, \ldots, N - M + 1$.

Dilation:

$$(f_i \oplus g)(n) = \min_{m=1,2,\ldots,M} \{f_i(n-m+1) - g(m)\} \tag{15}$$

where $n = M, M+1, \ldots, N$.

$$\text{Opening:} \quad (f_i \bigcirc g)(n) = ((f_i \Theta g)\ oplusg)(n) \tag{16}$$

$$\text{Closing:} \quad (f_i \bullet g)(n) = ((f_i\ oplusg)\ Thetag)(n) \tag{17}$$

where $f_i(n)$ is an EEG input segment of signal $s(n)$ with length W and $g(n)$ is the structuring element with length $M < W$ and $i = 1, 2, \ldots, P(= \lfloor W/M \rfloor)$. Two structuring elements are required for spike detection: the opening function to detect positive peaks and the closing function to detect negative peaks. The general formula of the spike detection operator is given by [61]

$$x_i(n) = f_i(n) - \frac{1}{2}[(f_i(n) \bigcirc g_1(n)) \bigcirc g_2(n)] - \frac{1}{2}[(f_i(n) \bigcirc g_1(n)) \bigcirc g_1(n)], \quad for\ n = 1, 2, \ldots, W \tag{18}$$

where $g_1(n)$ and $g_2(n)$ are opening and closing structuring elements. A Gaussian function can be used for both structuring elements as follows:

$$g_j(t) = A_j exp\left(\frac{-t^2}{2\sigma_j^2}\right), \quad j = 1, 2. \tag{19}$$

The amplitude, A_j, and variance, σ_j^2, for both structuring elements are optimized to enhance spike detectability. The output $x_i(n)$ of the morphological filter (Eq. 18) is compared with the bidirectional amplitude threshold. The bidirectional amplitude threshold is defined as

$$T_h = \mu + b\sigma \tag{20}$$

where

$$\mu = \sum_{n=1}^{M} x_i(n)/M \tag{21}$$

$$\sigma = \left(\frac{1}{M-1}\sum_{n=1}^{M}\left[x_i(n) - \mu^2\right]\right)^{1/2} \tag{22}$$

b is a constant that generally takes values between 3 and 5, and M is the length of $x_i(n)$. The spike detection process is carried out as in Fig. (5). This method achieved up to 99% accuracy in the spike detection process.

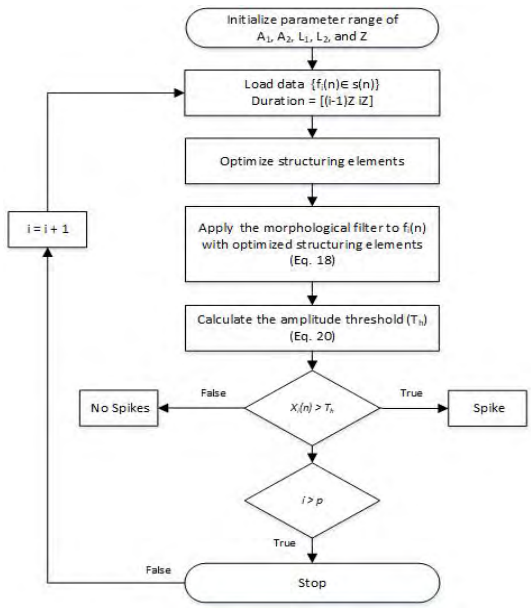

FIGURE 5. Morphological spike detection. s(n), A_1, A_2, L_1, L_2, and Z are the neural signal, positive spike amplitude, negative spike amplitude, positive spike duration, negative spike duration, and segment time, respectively, modified from [61].

9) WAVE SHAPE-BASED METHODS

Zhang *et al.* [62] presented a time-domain EEG spike detection method in which they decided whether a segment constituted a spike based on the completeness of the increasing and decreasing trends of a segment. Figure (6) illustrates complete and incomplete spike waves. The spike wave is considered complete when $b/a \geq 0.5$ and incomplete otherwise. Values of a and b are both estimated from the increasing or decreasing trends of segments, and if b/a meets a certain threshold, a decision in favor of a spike is taken. A total

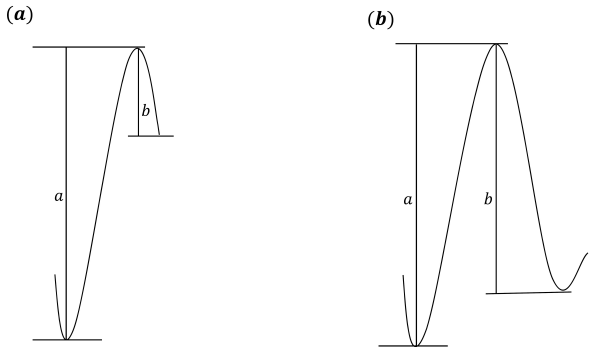

FIGURE 6. (a) Complete and (b) incomplete spike waves [62].

of 232 fragments from three patients were used for spike detection and the achieved spike detection rate was 95.9%.

10) ENERGY-BASED METHODS

Gaspard *et al.* [63] presented an energy based time-domain spike detection algorithm that begins with bandpass filtering of the signal from 10 to 70 Hz. The spike-descriptive values in this algorithm are the energy estimated with a Teager energy operator, the up-slope, and the down-slope of the spike. A multivariate time series is created from these descriptive values. The mean, covariance, and Mahalanobis distance are estimated for the multivariate vectors to discriminate spikes from non-spikes in a thresholding manner.

11) ICA-BASED METHODS

Ossadtchi *et al.* [64] presented a multi-channel MEG spike-localization method. The developed method uses independent component analysis (ICA) to decompose spike-like and background components into separate spatial topographies and associated time series. Then, a simple thresholding technique is applied to the spikiest independent components for detection purposes. The sensitivities achieved for the data of four patients were 91%, 85%, 79%, and 67%, respectively

Table (1) gives a summary of the previously described methods based on time-domain features.

TABLE 1. Summary of methods based on time-domain features.

Ref. & Year of Publication	# of Channels	Database			Frame Length	Features	Classification	Performance Metrics
		No. of Patients	Source	Duration				
[48] 2016	Single	-	Synthetic data	-	-	Fractal Dimension	Thresholding	Sensitivity: 90%
[46] 2014	Single	-	CARMEN database	900 s	20 s	Fractal dimension, Energy, Standard deviation	Thresholding	Detection rate: 100% False positive rate:0% (for improved SNEO by SSA beginning from 10 dB SNR)
[56] 2014	Single		Synthetic data		-	Recton corner data	FCM	-
[62] 2013	Single	3	Self-Recording	-	200 ms	Wave completeness ratio	SVM	Detection rate: 95.9%
[61] 2012	Single	-	University of Leicester database	-	5 s	Amplitude	Thresholding	Detection rate: up to 100% Precision: up to 98%
[44] 2012	Single	11	Erasme University Hospital database	30 min per patient	300 ms	Amplitude and duration	K-means clustering	Sensitivity : 93.7% Specificity: 93.7% Detection correlation coefficient: 93.6%
[35] 2011	Single	-	Male Charles Foster rats weighing between 200 and 250 g.	1275 s	-	Amplitude and slope	Thresholding	Detection rate: 99.3%
[43] 2007	Single	8	Neurology Department of Dokuz Eyll University, Izmir	-	150-160 ms	1stand 2nd half waves durations and amplitudes	Neural network	Sensitivity: 93.3% Specificity : 74.1%
[60] 2003	Single	20	Miami Children's Hospital	-	20-70 ms	Probability of signal attributes	Thresholding	Sensitivity: 65% Precision: 91%
[39] 1998	Single	5	Epilepsy Center of Miami Children's Hospital	15 min per patient	150 ms	Raw data	Neural network	Sensitivity: 84.38%Specificity: 94.48% Average detection rate: 89.43%
[45] 1988	Single	-	Self-Recording	-	-	Amplitude	Thresholding	-
[58] 2017	Multiple	30	National Neuroscience Institute, King Fahad Medical City, Riyadh	45 min per patient	100 ms	Amplitude and Dynamic Time Warping	Thresholding	Sensitivity: 92.45.3% Specificity : 95.81%
[53] 2015	Multiple	-	Self-Recording	-	-	Amplitude and duration	Thresholding	Detection rate: 80%
[53] 2015	Multiple	-	Self-Recording	-	-	Amplitude and duration	Thresholding	Detection rate: 80%
[54] 2015	Multiple	-	Self-Recording	-	20 s	Amplitude and duration	Thresholding	Sensitivity: 94% Detection rate: 80%
[63] 2014	Multiple	18	YaleNew Haven Hospital	16 hours per patient	200 ms	Energy, up slope, and down slope of the spike	Thresholding	Sensitivity: 75% to 100% False detection rate: 0.1 to 1.9 per minute
[57] 2013	Multiple	23	Department of Clinical Neurophysiology at the Medisch Spectrum Twente (MST) Netherland	481 min	0.6 s	Correlation coefficient	SVM	Sensitivity: 99 %
[52] 2012	Multiple	10	Epilepsy Program at Wayne State University	100 min	5 s	Amplitude and slope	Thresholding	Average sensitivity: 50%, Average precision: 30%
[59] 2011	Multiple	17	Kyoto University Hospital.	478 min	50 ms	Correlation coefficient	Thresholding	Sensitivity: 92.6% False positive rate : 0.26/ min
[25] 2009	Multiple	18	Self-Recording	4 days	1-10 s	Amplitude	Thresholding	Detection rate : 90%
[49] 2007	Multiple	13	University Hospital of Ioannina, Greece	20 to 60 s per patient	2 s	Amplitude	Thresholding	False positive rate reduction: 52%
[50] 2004	Multiple	4	Self-Recording	-	2 s	Amplitude	Data mining techniques	Kendall's concordance coefficient >0.015
[40] 1999	Multiple	50	Self-Recording	143 min		-	Multiple monotonic neural network (MMNN)	Correlation:85% and 76% for the two dataset respectively.
[38] 1994	Multiple	10	Johns Hopkins Hospital Epilepsy Monitoring Unit	40 min	2 s	spike parameters and context parameters	Neural network	Sensitivity: 0.73 False positive rate: 6.1/min
[41] 1992	Multiple	5	Oxford Medilog 9200 ambulatory monitoring system	63.8 min	0.4 ms	Derivatives of all channels	Neural network	Sensitivity: 97%.False positive rate: 1.5/min
[33] 1992	Multiple	20	Montreal Neurological Hospital	2000 min	6.4 ms	amplitude, duration, sharpness, and relative bands parameters	Thresholding	False positive rate: 0.79/min
[32] 1983	Multiple	5	Montreal neurological institute	4.2 min	-	8 features	Thresholding	Sensitivity 65-66%
[31] 1979	Multiple	34	Montreal Neurological Hospital	12240 min	320 ms	amplitude, duration, and sharpness	Thresholding	False positive rate: 0.11/min

B. FREQUENCY-DOMAIN METHODS

Frequency-domain techniques have also been used for EEG spike detection. Both the Fourier transform magnitude and phase can be exploited for this purpose. Frequency spectra of EEG signals can be estimated with parametric and non-parametric methods. Few attempts for parametric spectral estimation of EEG signals have been performed in the literature. Isaksson *et al.* [65] investigated the use of parametric methods, such as autoregressive (AR) and autoregressive moving average (ARMA) models, to create time-invariant models for EEG signals. They also used Kalman filtering for the same purpose. With these models, EEG spikes can be detected by examining the model's residual values; the larger the value, the more likely it is to be a spike sample. In addition, the spectra of these models have been computed and divided into short sub-bands and their energies and standard deviations have been used for possible spike detection.

Most of the work on frequency domain spike detection methods from EEG signals adopted non-parametric spectral estimation techniques as will be detailed in the following sub-sections.

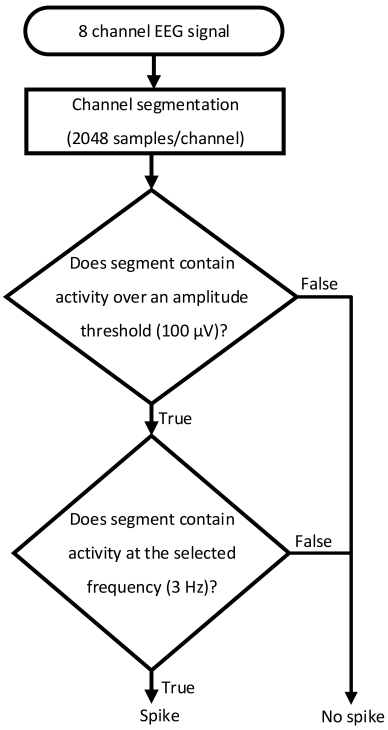

FIGURE 7. Zapata-Ferrer *et al.* method for spike detection, modified from [66].

1) FEATURE-BASED METHODS

EEG spikes generally do not occur in isolation. That is, a spike in a certain channel could appear in many channels at the same time. Zapata-Ferrer *et al.* [66] presented a multi-channel spike detection algorithm that depends on processing the EEG signal on a segment-by-segment basis, as shown in Fig. (7). Both the amplitude and frequency activities of the signal segments are tested for the existence of spikes. Windows of 8.192-s length have been used in this approach, and hardware has been built for that purpose.

2) METHODS BASED ON ARTIFICIAL INTELLIGENCE

As in the time domain spike detection process, artificial intelligence has been also applied on frequency-domain spike detection. Valenti *et al.* [67] presented a frequency-domain technique based on data-mining classification for the detection of epileptic EEG spikes utilizing decision trees and statistical Bayesian classifiers. Detection models based on signal periodicity were developed for the EEG signal batches at hand in the frequency domain. In the training phase, EEG spikes were extracted with the help of experts. This technique achieved a detection rate of 84% with a false-positive rate of 26%.

Feuchet *et al.* [68] introduced an automatic spike detection method using a multilayer perceptron (MLP) and the instantaneous power computed via the Hilbert transform as an input. An MLP has three layers: the 17 input nodes (channels), 12 hidden nodes, and nine output nodes corresponding to the seven spike classes, EMG interferences, and background activity class. They tested their method using four routine EEG recordings and reported an average sensitivity of 88.1% and an average specificity of 89.3%, respectively. Exarchos *et al.* [69] presented an event-detection and -classification approach for EEG transient activities based on association rules. Four activities were considered in this approach: muscle activity, sharp alpha activity, eye blinking activity, and epileptic spikes. The transient activities were first detected with a thresholding process using a threshold $t = \frac{1}{N}\sum_{i=1}^{N}|x_i|$, where N was the number of signal samples and x_i represented the values of the signal samples. Sixteen features were extracted from the suspicious transient activities: area, duration, standard deviation, sharpness, dominant frequency, average slope, and ten average powers extracted from frequency-sliced power spectral density. Features were reduced with Greedy hill-climbing search strategies, such as the forward-selection approach. Templates were created and stored for different suspicious activities, and, finally, association rules are used to classify each incoming signal activity as being a member of a certain cluster of events. This approach was tested on 25 EEG recordings and led to 87.38% accuracy.

Tarassenko *et al.* [70] presented a neural-based method for interictal EEG spike detection. A multi-layer perceptron was used as a classifier for spike and non-spike activities. Both time-domain and frequency-domain features were used. The time-domain features were the average slope, sharpness, mobility, and complexity.

The average slope was defined as

$$Average\ slope = \frac{\Delta v}{\Delta t} = \frac{|s_0| + |s_1|}{2} \tag{23}$$

where the slope from v_0 to v_1 was s_0 and that from v_1 to v_2 was s_1. The sharpness was defined as,

$$Sharpness = \frac{\Delta^2 v}{\Delta^2 t} = |s_1 - s_0| \tag{24}$$

TABLE 2. Summary of methods based on frequency-domain features.

Ref. & Year of Publication	# of Channels	Database			Frame Length	Features	Classification	Performance Metrics
		No. of Patients	Source	Duration				
[71] 2011	Single	25	Self-Recording	103 hours	1-10 s	Phase congruency	Thresholding	Sensitivity: 80%
[72] 2009	Single	-	EEG data of genetic absence epilepsy rats of Strasburg	-	1.28 s	Fundamental frequency and harmonics powers	Thresholding	Sensitivity : 96%, Specificity: up to 97%
[73] 2009	Single	-	Self-Recording	-	2000 ms	Power in t-spectra	Thresholding	-
[67] 2006	Multiple	3	Self-Recording	-	0.32 s.	Periodicity	Decision tree, and Bayesian classifiers	Detection rate: 84%. False positive rate: 26 %
[69] 2006	Single	-	Self-Recording	-	355 ms	Sixteen features including area, duration, standard deviation, sharpness, dominant frequency, average slope, and ten average powers extracted from frequency sliced power spectral density.	Association rule based classifier	Accuracy: 87%
[70] 1998	Multiple	-	Self-Recording	-	3-sample time-domain window	average slope, sharpness, mobility, and complexity, Levinson-Durbin reflection coefficients	Neural network	Sensitivity: up to 97.3%, Specificity: up to 95.5%
[68] 1997	Multiple	3	University of Vienna Child Neuropsychiatry Department EEG laboratory	90 min	-	Instantaneous power	Neural network	An average sensitivity: 88.1%. An average specificity: 89.3%.
[74] 1994	Multiple	6	Vaajasalo Epilepsy Hospital	360 min	0.48 - 2.16 s	12 features	Thresholding	Sensitivity: 31%
[75] 1991	Multiple	1	Postgraduate Medical & Pharmaceutical Institute, Prague, Czechlovakia	1 min	-	Momentary power and frequency	Thresholding	Sensitivity: 90% False Prediction Rate: 4.0
[65] 1981	Multiple	-	Self-Recording	-	-	Residual error and spectral energy of sub-bands	Thresholding	-

The mobility, M, and complexity, C, were defined through the following set of equations:

$$v_{av}^2 = \frac{v_0^2 + v_1^2 + v_2^2}{3} \tag{25}$$

$$s_{av}^2 = \frac{s_0^2 + s_1^2}{2} \tag{26}$$

$$(2\pi C)^2 = \left(\frac{1}{(\Delta t)^2} \frac{(s_1 - s_0)^2}{s_{av}^2} \right) - (2\pi M)^2 \tag{27}$$

The factor 2π was used to make the units of M and C in Hz. Some sort of normalization was used with these parameters, as their values were unbounded. The frequency-domain features of spikes were obtained using AR spectral modeling. The Levinson–Durbin algorithm was used for this purpose, and the set of reflection coefficients estimated within this algorithm was used in the feature vector. Table (2) summarizes the methods based on frequency domain features.

3) METHODS BASED ON SUB-BAND DECOMPOSITION

Sub-band decomposition is easier to implement in frequency domain than in time domain. So, it can be used easily with frequency-domain spike detection methods from EEG signals. Witte *et al.* [75] proposed spike detection method that uses the discrete Hilbert transform to extract momentry power and frequency that can be evaluated at each sample. Pietilä *et al.* [74] developed an epileptic activity-recognition method using the adaptive segmentation of EEG signals to extract a set of features including the amplitude average, minimum, and maximum, the segment variability, and the spectral power of five bands.

4) PERIODICITY-BASED METHODS

Periodicity of EEG signals can be easily determined in the frequency domain. Van Hese *et al.* [72] investigated a frequency-domain spike detection method using the EEG data of genetic absence epilepsy rats of Strasburg. This data exhibited simultaneous spike and wave discharges. The investigated method assumed that the EEG signals with spikes were quasi-periodic. This method began with spectrogram estimation of the background signal, harmonic analysis to estimate the fundamental frequency and harmonics, and finally, classification of signal segments based on the ratio between the harmonic power and the total spectrum power. This method achieved sensitivity up to 96% and specificity up to 97% utilizing the available database.

5) PHASE-BASED METHODS

Fourier transform of EEG signals is a complex signal. Spikes in the signals lead to certain signatures in the phase spectra. This signature can be used for spike detection. Logesparan and Rodriguez-Villegas introduced a frequency-domain method for spike detection based on traditional phase congruency, denoised phase congruency (DPC), and modified phase congruency (MPC), as shown in Fig. (8) [71]. The phase congruency concept was first introduced in edge detection in image-processing applications [76]. This concept is based on the maximum phase variation due to edges or sharp transitions in signals. The phase congruency feature, $F(x)$, is normalized with a peak detector and restricted to a value between 0 and 1. The normalized phase congruency feature is compared with a threshold, β, to decide whether a spike is detected. The method achieved spike detection accuracy of 80%.

6) STATISTICAL-BASED METHODS

Kobayashi *et al.* [73] presented a spike detection method based on time-frequency analysis. It depended on the Gabor transform and detected spikes by detecting changes in power compared to background activity using t-statistics controlled by false discovery rate (FDR) for the correction of multiple testing errors. Simulation results revealed that spikes led to high-frequency oscillations in the FDR-controlled t-spectra.

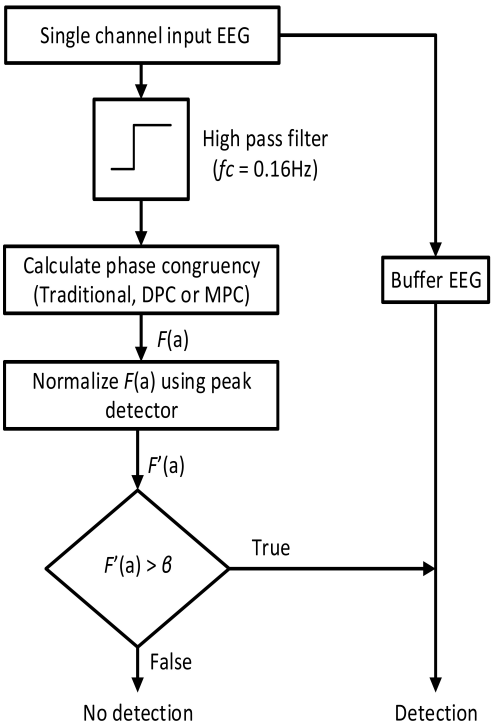

FIGURE 8. Logesparan and Rodriguez-Villegas spike detection method based on traditional phase congruency, DPC, and MPC, modified from [71].

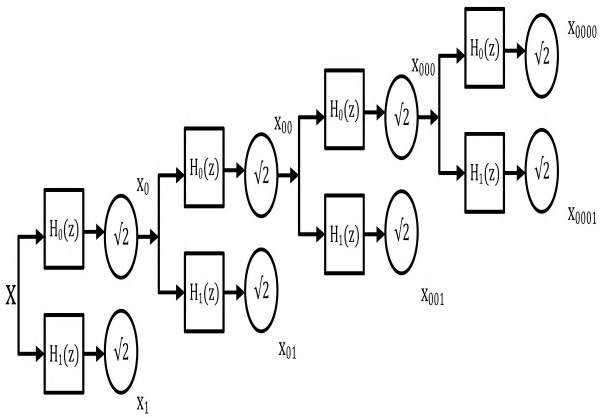

FIGURE 9. Multi-level wavelet decomposition.

C. WAVELET-DOMAIN METHODS

The Wavelet transform is mainly based on a sub-band signal decomposition process with down sampling to remove signal redundancy. The discrete wavelet transform (DWT) makes use of low-pass $H_0(z)$ and high-pass $H_1(z)$ digital filters in addition to a decimation process. The DWT can be performed with a single-level or multi-level structure, as shown in Fig. (10). The wavelet transform has gained popularity in medical signal processing applications, because it translates a signal into an approximation component having most of the signal energy and several detailed components that show sharp transitions in a signal clearly [77].

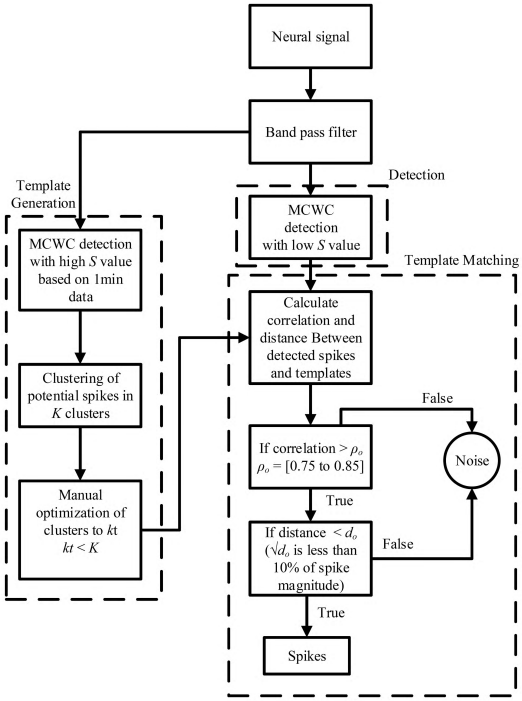

FIGURE 10. Block diagram of M-sorter algorithm, modified from Fig. 1 in [82].

1) PHASE-BASED METHODS

Spectral estimation is possible in the wavelet domain, and hence we can obtain complex spectra. So, working on the phase of these spectra can help in the spike detection process. Richard *et al.* [78] presented a spike detection algorithm based on the Morlet wavelet transform. This algorithm depends on the spectral estimation of wavelet-transformed EEG signal segments. The algorithm assumes that signal segments with spikes have different harmonics. The phase differences are estimated between the first and second harmonics, first and third harmonics, and first and fourth harmonics. A 3-D phase difference space is then built. Simulation results have proved that there is a signature for the spike in the 3-D space. This method was tested on data recorded from 29 mice. It achieved a TP rate up to 100% with a FP rate less than 10%.

2) METHODS BASED ON ARTIFICIAL INTELLIGENCE

Artificial intelligence finds applications in spike detection in all domains. Dümpelman and Elger [79] compared the performance of three automatic spike detection algorithms (rule-based, two-stage, and wavelet-based algorithms) with human EEG reviewers using iEEG recordings. The three algorithms achieved rates of agreement with human EEG reviewers of 24%, 32%, and 26%, respectively. Kalayci and Ozdamar [80] suggested the use of a five-level wavelet transform prior to a neural classifier for epileptic EEG spike detection. Both Db4 and Db20 wavelet transforms were used as inputs for neural training and testing. Results obtained from five patients revealed that Db20 wavelet transforms achieved better results than Db4 wavelet transforms.

3) FEATURE-BASED METHODS

Feature extraction can be performed easily on the wavelet sub-bands. Goelz *et al.* [81] presented an automated system for epileptiform-activity detection based on the continuous wavelet transform (CWT). Their method consisted of three stages: transit detection, feature extraction from CWT as fingerprints, and event classification as epileptiforms or artifacts. They evaluated the method on 11 patients with a total of 278 min, and it resulted in a sensitivity of 84%.

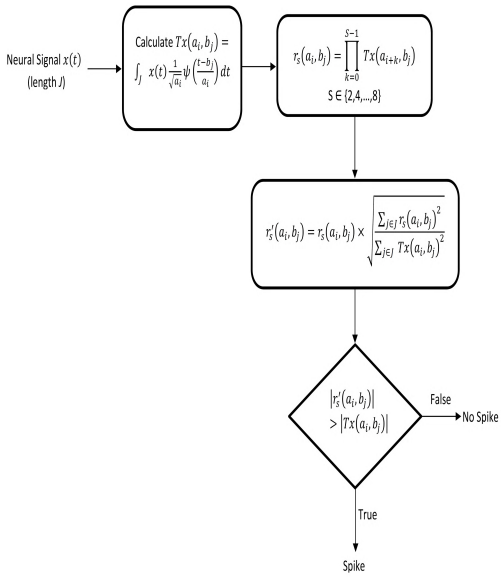

FIGURE 11. Block diagram of MCWC, modified from Fig. 2 in [82].

4) CORRELATION-BASED METHODS

Yuan *et al.* [82] presented a wavelet-based spike detection algorithm called M-sorter consisting of template generation, detection, and matching, as shown in Fig. (11). This algorithm depends mainly on multiple correlation wavelet coefficients (MCWC) and adapts template matching for classification. The flow graph of the MCWC is shown in Fig. (12). $Tx(a_i, b_j)$ is the wavelet transform of the EEG signal, and it can be considered a measure of resemblance between the wavelet function and EEG signal $x(t)$ with appropriate translation and scaling parameters, a_i and b_j. The term $r_s'(a_i, b_j)$ is the normalized correlation of wavelet coefficients. This algorithm produces fewer false alarms than traditional thresholding-based detection algorithms. It can be applied in real time, and it can work in non-ideal cases. Most of the parameters used in this algorithm are selected automatically. Table (3) gives a summary of the methods based on wavelet-domain features.

IV. GENERAL DISCUSSION AND OPEN RESEARCH POINTS

From this comprehensive survey study, it is clear that most of the spike detection methods utilized with EEG and MEG signals lie in the category of time-domain methods. The reason for this is the requirement to process the EEG or MEG signals in real time with as less complexity as possible. So, a finite time domain support of the signal is required to take a decision. If the decision is taken directly on signal amplitude, it will be better to save time. Unfortunately, this strategy leads to low detection performance [25], [49]. Inclusion of waveform shape and energy as discrimination factors may lead to better results in spike detection as reported in [46], [63], and [70].

Signal derivative is a well-known strategy for spike detection. If this signal derivative is considered on a multi-channel basis to consolidate the detection performance, very good results will be expected. This was reported in [41] by working on derivatives of all channels leading to sensitivity levels up to 97%. So the strategy based on signal derivatives is a very good candidate to use in EEG and MEG spike detection.

From the reported results, correlation-based detection is a very strong candidate for EEG and MEG spike detection [57], [59]. The reason for this is that the correlation based detection depends on a matched filtering concept that maximizes the SNR at the filter output. So, it is recommended to use a spike template generated from the averaging of a group of spikes previously determined and go through the signal with this template with a convolution process, the outcome of this process will be maximized in the presence of any spike of such type corresponding to any of the constituents of the template. An artificial intelligence processing of the output of this convolution process will be very useful in enhancing the spike detection process.

A recommended strategy to obtain high spike detection rates is to work in time domain on a multi-channel basis with two spike detection techniques; one based on signal derivative, and the other based on matched filtering with a synthetic template. The amplitudes generated from both processes will only be used for classification as both processes maximize the signal amplitude in the presence of spikes. An important issue that need to be considered in this strategy is that the peaks

TABLE 3. Summary of methods based on wavelet-domian features.

Ref. & Year of Publication	# of Channels	Database			Frame Length	Features	Classification	Performance Metrics
		No. of Patients	Source	Duration				
[78] 2015	Multiple	-	Self-Recording	120 min	135 ms	Phase differences between harmonics	Thresholding	True Prediction Rate:up to 100% False Prediction Rate:<10 %
[82] 2012	Single	-	Self-Recording	-	1 ms	Wavelet correlation	Thresholding	Accuracy: 85%
[81] 2000	Single	11	Self-Recording	278 min	-	amplitude, phase, translation, scale, long amplitude		Sensitivity: 84% Selectivity: 12%.
[79] 1999	Multiple	7	Medical center of the university of Bonn	136 min	-	Amplitude, wavelet coefficient	Thresholding	Sensitivity of the three algorithms: 24%, 32%, 26%.
[80] 1995	Multiple	-	EEG data from the Epilepsy Center of the Miami Children's Hospital	-	100-2560 ms	Wavelet coefficients	Neural network	Sensitivity: up to 93.1% Specificity: up to 94.3% Accuracy: up to 93.7%

TABLE 4. List of features.

Feature Category	Features List
Time Domain	Amplitude, Fractal dimension, Energy, Standard deviation, upslope, and downslope of the spike, Derivatives of all channels, first- and second-half waves durations and amplitudes, Correlation coefficient, Probability of signal attributes, Wave completeness ratio, Amount of the data in recton corners
Frequency Domain	Residual error, Spectral energy of sub-bands, curvature, rhythmicity, and frequency contents, Periodicity, Dominant frequency, Average powers extracted from frequency sliced power spectral density, Fundamental frequency and harmonics powers, Phase congruency, Power in T-spectra, Mobility and complexity, LevinsonDurbin reflection coefficients, Phase differences between harmonics
Wavelet Domain	Wavelet coefficients

generated with the derivatives of the spikes precede the peaks generated with the matched filtering approach. So, a vector containing the outputs of the derivatives and the outputs of the matched filtering approach need to span a wide enough support to cover the duration of the spike at least. Automatic classification with a classifier as SVM will be very appropriate for this task. Teager, Qian, and SNEO methods are different variants of the simple time domain thresholding techniques that depend on some sorts of difference operators [45]–[47]. They can be well-implemented instead of the simple derivatives as indicators for the local activity varieties of the EEG or MEG signals in a finite support based on the signal energy. These methods can also be implemented together with the matched filtering approach instead of the simple derivatives on the time domain signals. Another issue that needs to be stabilized prior to the use of derivative-like operators is the spurious noise or spurious spikes. This type of spikes can be removed through a simple thresholding process first or through a wavelet denoising process to avoid the high rates of false alarms. The vast number of channels existing in EEG and MEG signals may lead to a heavy computational burden for spike detection, especially if working on a multi-channel basis, and this makes the channel selection a must. Different strategies of channel selection have been developed for EEG seizure detection and prediction . There is a need to develop similar strategies to limit the number of channels incorporated to the spike detection process in MEG. Simple variance based methods in the time domain will be very appropriate for the channel selection in the spike detection process due to the nature of the highly peaked spikes. Generally, EEG and MEG signals of large volumes need to be compressed for storage, and the spike detection may be performed on an offline basis. So, the sensitivity of the spike detection strategy making use of the method of signal compression is an open area for research. It is strongly thought that the multi-channel nature of the spike detection operation will compensate for some extent for the loss due to the compression process. A new trend that is emerging now in the processing of medical records is the security and privacy of patients. It may be required to secure highly confidential patient records from being open to the public. With the huge amounts of data in EEG and MEG signals, this security requires some sort of encryption or partial encryption of signals. Is it possible to gain some useful information of the encrypted or partially encrypted medical records? This is a question that needs to be answered. Further, special-purpose encryption algorithms need to be considered for the signal full of spikes as the encryption of this type of signals differs totally from the encryption of stationary signals. Also, information embedding into the medical records of patients as in the watermarking algorithms need to take care of the spiky nature of the signals.

V. CONCLUSION

In this paper, we reviewed some epileptic spike detection algorithms, a brief summary of which is given in Tables 1, 2, and 3 at the ends of Sections 3.1, 3.2, and 3.3, respectively. We also list in Table 4 the main features used in the reviewed works. It is clear from these tables that most of the spike detection methods adopt time- or frequency-domain analysis, with few methods using wavelet analysis. The single- and multi-channel time-domain methods showed high performance; however, as mentioned earlier, these methods still need to be validated using standard spike databases. These tables also suggest that spike detection methods with classifiers achieved better performance than methods based on simple thresholding.

This paper offers a brief insight into the performance of the reviewed spike detection methods according to the tests performed using the researchers' own databases. Despite the great effort exerted to automate the detection of spikes, the algorithms developed thus far are still not as reliable as experienced human interpreters. Thus, the development of a reliable automated spike detection system will require effort from the scientific community due to the lack of standard spike databases against which the developed algorithms can be properly evaluated and compared.

ACKNOWLEDGMENT

The authors would like to acknowledge the support received from KACST-Lockheed Martin University Funding Program.

COMPETING INTERESTS

The authors declare that they have no competing interests.

REFERENCES

[1] World Health Organization. *Fact Sheets*. Accessed: Feb. 2017. [Online]. Available: http://www.who.int/mediacentre/factsheets/fs999/en/
[2] G. Waterstraat, T. Fedele, M. Burghoff, H.-J. Scheer, and G. Curio, "Recording human cortical population spikes non-invasively—An EEG tutorial," *J. Neurosci. Methods*, vol. 250, pp. 74–84, Jul. 2015.
[3] *10/20 System Positioning Manual*, Trans Cranial Technol., Hong Kong, 2012.
[4] M. D. Holmes, "Dense array EEG & epilepsy," in *Management of Epilepsy*, M. K. Gunel, Ed. Rijeka, Croatia: IntechOpen, 2011, ch. 8, doi: 10.5772/17244.
[5] D. Cohen, "Magnetoencephalography: Evidence of magnetic fields produced by alpha-rhythm currents," *Science*, vol. 161, no. 3843, pp. 784–786, 1968.
[6] D. Cohen, "Magnetoencephalography: Detection of the brain's electrical activity with a superconducting magnetometer," *Science*, vol. 175, no. 4022, pp. 664–666, 1972.
[7] Y. Okada, "Neurogenesis of evoked magnetic fields," *Biomagnetism: An Interdisciplinary Approach*, S. H. Williamson, G. L. Romani, L. Kaufman, and I. Modena, Eds. New York, NY, USA: Plenum Press, 1983, pp. 399–408.
[8] D. S. Barth, W. Sutherling, and J. Beatty, "Intracellular currents of interictal penicillin spikes: Evidence from neuromagnetic mapping," *Brain Res.*, vol. 368, no. 1, pp. 36–48, 1986.
[9] S. Baillet, "Magnetoencephalography for brain electrophysiology and imaging," *Nature Neurosci.*, vol. 20, no. 3, p. 327, 2017.
[10] F. L. da Silva, "EEG and MEG: Relevance to neuroscience," *Neuron*, vol. 80, no. 5, pp. 1112–1128, 2013.
[11] M. Yamazaki *et al.*, "Comparison of dense array EEG with simultaneous intracranial EEG for interictal spike detection and localization," *Epilepsy Res.*, vol. 98, nos. 2–3, pp. 166–173, 2012.
[12] S. Raghavendra, J. Nooraine, and S. M. Mirsattari, "Role of electroencephalography in presurgical evaluation of temporal lobe epilepsy," *Epilepsy Res. Treat.*, vol. 2012, Jun. 2012, Art. no. 204693.
[13] R. Wennberg and D. Cheyne, "Reliability of MEG source imaging of anterior temporal spikes: Analysis of an intracranially characterized spike focus," *Clin. Neurophysiol.*, vol. 125, no. 5, pp. 903–918, 2014.
[14] D. J. Englot *et al.*, "Epileptogenic zone localization using magnetoencephalography predicts seizure freedom in epilepsy surgery," *Epilepsia*, vol. 56, no. 6, pp. 949–958, 2015.
[15] T. Uda *et al.*, "sLORETA-qm for interictal MEG epileptic spike analysis: Comparison of location and quantity with equivalent dipole estimation," *Clin. Neurophysiol.*, vol. 123, no. 8, pp. 1496–1501, 2012.
[16] Y. Ueda *et al.*, "The presence of short and sharp MEG spikes implies focal cortical dysplasia," *Epilepsy Res.*, vol. 114, pp. 141–146, Aug. 2015.
[17] N. Tanaka *et al.*, "Clinical value of magnetoencephalographic spike propagation represented by spatiotemporal source analysis: Correlation with surgical outcome," *Epilepsy Res.*, vol. 108, no. 2, pp. 280–288, 2014.
[18] Y. Kakisaka, Z. I. Wang, J. C. Mosher, D. R. Nair, A. V. Alexopoulos, and R. C. Burgess, "Magnetoencephalography's higher sensitivity to epileptic spikes may elucidate the profile of electroencephalographically negative epileptic seizures," *Epilepsy Behav.*, vol. 23, no. 2, pp. 171–173, 2012.
[19] M. Heers *et al.*, "Detection of epileptic spikes by magnetoencephalography and electroencephalography after sleep deprivation," *Seizure*, vol. 19, no. 7, pp. 397–403, 2010.
[20] C. Carl, A. Açık, P. König, A. K. Engel, and J. F. Hipp, "The saccadic spike artifact in MEG," *NeuroImage*, vol. 59, no. 2, pp. 1657–1667, 2012.
[21] A. Mazzoni, K. Whittingstall, N. Brunel, N. K. Logothetis, and S. Panzeri, "Understanding the relationships between spike rate and delta/gamma frequency bands of LFPs and EEGs using a local cortical network model," *NeuroImage*, vol. 52, no. 3, pp. 956–972, 2010.
[22] C. H. Zhang *et al.*, "Thalamocortical relationship in epileptic patients with generalized spike and wave discharges—A multimodal neuroimaging study," *NeuroImage, Clin.*, vol. 9, pp. 117–127, Jan. 2015.
[23] D. Flanagan, R. A. Badawy, and G. D. Jackson, "EEG–fMRI in focal epilepsy: Local activation and regional networks," *Clin. Neurophysiol.*, vol. 125, no. 1, pp. 21–31, 2014.
[24] H. Itabashi *et al.*, "Electro- and magneto-encephalographic spike source localization of small focal cortical dysplasia in the dorsal peri-rolandic region," *Clin. Neurophysiol.*, vol. 125, no. 12, pp. 2358–2363, 2014.
[25] A. J. Casson, E. Luna, and E. Rodriguez-Villegas, "Performance metrics for the accurate characterisation of interictal spike detection algorithms," *J. Neurosci. Methods*, vol. 177, no. 2, pp. 479–487, 2009.
[26] M. Adjouadi *et al.*, "Interictal spike detection using the Walsh transform," *IEEE Trans. Biomed. Eng.*, vol. 51, no. 5, pp. 868–872, May 2004.
[27] C. C. C. Pang, A. R. M. Upton, G. Shine, and M. V. Kamath, "A comparison of algorithms for detection of spikes in the electroencephalogram," *IEEE Trans. Biomed. Eng.*, vol. 50, no. 4, pp. 521–526, Apr. 2003.
[28] R. Nowak, M. Santiuste, and A. Russi, "Toward a definition of MEG spike: Parametric description of spikes recorded simultaneously by MEG and depth electrodes," *Seizure*, vol. 18, no. 9, pp. 652–655, 2009.
[29] J. R. Stevens, B. L. Lonsbury, and S. L. Goel, "Seizure occurrence and interspike interval: Telemetered electroencephalogram studies," *Arch. Neurol.*, vol. 26, no. 5, pp. 409–419, 1972.
[30] J. Gotman and P. Gloor, "Automatic recognition and quantification of interictal epileptic activity in the human scalp EEG," *Electroencephalogr. Clin. Neurophysiol.*, vol. 41, no. 5, pp. 513–529, Nov. 1976.
[31] J. Gotman, J. R. Ives, and P. Gloor, "Automatic recognition of inter-ictal epileptic activity in prolonged EEG recordings," *Electroencephalogr. Clin. Neurophysiol.*, vol. 46, no. 5, pp. 510–520, May 1979.
[32] P. G. De Oliveira, C. Queiroz, and F. L. Da Silva, "Spike detection based on a pattern recognition approach using a microcomputer," *Electroencephalogr. Clin. Neurophysiol.*, vol. 56, no. 1, pp. 97–103, 1983.
[33] J. Gotman and L.-Y. Wang, "State dependent spike detection: Validation," *Electroencephalogr. Clin. Neurophysiol.*, vol. 83, no. 1, pp. 12–18, 1992.
[34] J. Gotman and L.-Y. Wang, "State-dependent spike detection: Concepts and preliminary results," *Electroencephalogr. Clin. Neurophysiol.*, vol. 79, no. 1, pp. 11–19, 1991.
[35] A. K. Keshri, R. K. Sinha, A. Singh, and B. N. Das, "DFAspike: A new computational proposition for efficient recognition of epileptic spike in EEG," *Comput. Biol. Med.*, vol. 41, no. 7, pp. 559–564, 2011.
[36] G. Wang, G. Worrell, L. Yang, C. Wilke, and B. He, "Interictal spike analysis of high-density EEG in patients with partial epilepsy," *Clin. Neurophysiol.*, vol. 122, no. 6, pp. 1098–1105, Jun. 2011.
[37] P. E. Coutin-Churchman, J. Y. Wu, L. L. K. Chen, K. Shattuck, S. Dewar, and M. R. Nuwer, "Quantification and localization of EEG interictal spike activity in patients with surgically removed epileptogenic foci," *Clin. Neurophysiol.*, vol. 123, no. 3, pp. 471–485, 2012.
[38] W. Webber, B. Litt, K. Wilson, and R. P. Lesser, "Practical detection of epileptiform discharges (EDs) in the EEG using an artificial neural network: A comparison of raw and parameterized EEG data," *Electroencephalogr. Clin. Neurophysiol.*, vol. 91, no. 3, pp. 194–204, 1994.
[39] Ö. Özdamar and T. Kalayci, "Detection of spikes with artificial neural networks using raw EEG," *Comput. Biomed. Res.*, vol. 31, no. 2, pp. 122–142, 1998.
[40] S. B. Wilson, C. A. Turner, R. G. Emerson, and M. L. Scheuer, "Spike detection II: Automatic, perception-based detection and clustering," *Clin. Neurophysiol.*, vol. 110, no. 3, pp. 404–411, 1999.
[41] A. J. Gabor and M. Seyal, "Automated interictal EEG spike detection using artificial neural networks," *Electroencephalogr. Clin. Neurophysiol.*, vol. 83, no. 5, pp. 271–280, Nov. 1992.
[42] M. I. Khalid *et al.*, "Epileptic MEG spikes detection using common spatial patterns and linear discriminant analysis," *IEEE Access*, vol. 4, pp. 4629–4634, 2016.
[43] Z. H. Inan and M. Kuntalp, "A study on fuzzy C-means clustering-based systems in automatic spike detection," *Comput. Biol. Med.*, vol. 37, no. 8, pp. 1160–1166, Aug. 2007.
[44] A. Nonclercq *et al.*, "Cluster-based spike detection algorithm adapts to interpatient and intrapatient variation in spike morphology," *J. Neurosci. Methods*, vol. 210, no. 2, pp. 259–265, 2012.
[45] J. Qian, J. S. Barlow, and M. P. Beddoes, "A simplified arithmetic detector for EEG sharp transients-preliminary results," *IEEE Trans. Biomed. Eng.*, vol. BE-35, no. 1, pp. 11–18, Jan. 1988.
[46] H. Azami and S. Sanei, "Spike detection approaches for noisy neuronal data: Assessment and comparison," *Neurocomputing*, vol. 133, pp. 491–506, Jun. 2014.
[47] C. K. Loo, A. Samraj, and G. C. Lee, "Evaluation of methods for estimating fractal dimension in motor imagery-based brain computer interface," *Discrete Dyn. Nature Soc.*, vol. 2011, Oct. 2011, Art. no. 724697.
[48] M. Salmasi, U. Büttner, and S. Glasauer, "Fractal dimension analysis for spike detection in low SNR extracellular signals," *J. Neural Eng.*, vol. 13, no. 3, p. 036004, 2016.
[49] V. P. Oikonomou, A. T. Tzallas, and D. I. Fotiadis, "A Kalman filter based methodology for EEG spike enhancement," *Comput. Methods Programs Biomed.*, vol. 85, no. 2, pp. 101–108, 2007.

[50] J. Bourien, J. J. Bellanger, F. Bartolomei, P. Chauvel, and F. Wendling, "Mining reproducible activation patterns in epileptic intracerebral EEG signals: Application to interictal activity," *IEEE Trans. Biomed. Eng.*, vol. 51, no. 2, pp. 304–315, Feb. 2004.

[51] A. J. Casson and E. Rodriguez-Villegas, "Toward online data reduction for portable electroencephalography systems in epilepsy," *IEEE Trans. Biomed. Eng.*, vol. 56, no. 12, pp. 2816–2825, Dec. 2009.

[52] D. T. Barkmeier *et al.*, "High inter-reviewer variability of spike detection on intracranial EEG addressed by an automated multi-channel algorithm," *Clin. Neurophysiol.*, vol. 123, no. 6, pp. 1088–1095, Jun. 2012.

[53] F. Furbass *et al.*, "Automatic detection of rhythmic and periodic patterns in critical care EEG based on american clinical neurophysiology society (ACNS) standardized terminology," *Clin. Neurophysiol.*, vol. 45, no. 3, pp. 203–213, 2015.

[54] J. Herta *et al.*, "Prospective assessment and validation of rhythmic and periodic pattern detection in NeuroTrend: A new approach for screening continuous EEG in the intensive care unit," *Epilepsy Behav.*, vol. 49, pp. 273–279, Aug. 2015.

[55] J. Koren *et al.*, "Prediction of rhythmic and periodic EEG patterns and seizures on continuous EEG with early epileptiform discharges," *Epilepsy Behav.*, vol. 49, pp. 286–289, Aug. 2015.

[56] D. Karacor, S. Nazlibilek, M. H. Sazli, and E. S. Akarsu, "Discrete Lissajous figures and applications," *IEEE Trans. Instrum. Meas.*, vol. 63, no. 12, pp. 2963–2972, Dec. 2014.

[57] S. S. Lodder, J. Askamp, and M. J. van Putten, "Inter-ictal spike detection using a database of smart templates," *Clin. Neurophysiol.*, vol. 124, no. 12, pp. 2328–2335, 2013.

[58] M. I. Khalid, T. N. Alotaiby, S. A. Aldosari, S. A. Alshebeili, M. H. Alhameed, and V. Poghosyan, "Epileptic MEG spikes detection using amplitude thresholding and dynamic time warping," *IEEE Access*, vol. 5, pp. 11658–11667, 2017.

[59] Z. Ji *et al.*, "An automatic spike detection system based on elimination of false positives using the large-area context in the scalp EEG," *IEEE Trans. Biomed. Eng.*, vol. 58, no. 9, pp. 2478–2488, Sep. 2011.

[60] M. Adjouadi and M. Ayala, "Making waves useful: Improving epileptiform activity recognition using energy criteria," *IEEE Potentials*, vol. 22, no. 1, pp. 6–11, Feb. 2003.

[61] X. Liu, X. Yang, and N. Zheng, "Automatic extracellular spike detection with piecewise optimal morphological filter," *Neurocomputing*, vol. 79, pp. 132–139, Mar. 2012.

[62] J. Zhang, J. Zou, M. Wang, L. Chen, C. Wang, and G. Wang, "Automatic detection of interictal epileptiform discharges based on time-series sequence merging method," *Neurocomputing*, vol. 110, pp. 35–43, Jun. 2013.

[63] N. Gaspard, R. Alkawadri, P. Farooque, I. I. Goncharova, and H. P. Zaveri, "Automatic detection of prominent interictal spikes in intracranial EEG: Validation of an algorithm and relationsip to the seizure onset zone," *Clin. Neurophysiol.*, vol. 125, no. 6, pp. 1095–1103, Jun. 2014.

[64] A. Ossadtchi, S. Baillet, J. C. Mosher, D. Thyerlei, W. Sutherling, and R. M. Leahy, "Automated interictal spike detection and source localization in magnetoencephalography using independent components analysis and spatio-temporal clustering," *Clin. Neurophysiol.*, vol. 115, no. 3, pp. 508–522, 2004.

[65] A. Isaksson, A. Wennberg, and L. H. Zetterberg, "Computer analysis of EEG signals with parametric models," *Proc. IEEE*, vol. 69, no. 4, pp. 451–461, Apr. 1981.

[66] A. Zapata-Ferrer *et al.*, "Detecting the onset of epileptic seizures," *IEEE Eng. Med. Biol. Mag.*, vol. 18, no. 3, pp. 78–83, May 1999.

[67] P. Valenti, E. Cazamajou, M. Scarpettini, A. Aizemberg, W. Silva, and S. Kochen, "Automatic detection of interictal spikes using data mining models," *J. Neurosci. Methods*, vol. 150, no. 1, pp. 105–110, 2006.

[68] M. Feucht *et al.*, "Simultaneous spike detection and topographic classification in pediatric surface EEGs," *NeuroReport*, vol. 8, no. 9, pp. 2193–2197, 1997.

[69] T. P. Exarchos, A. T. Tzallas, D. I. Fotiadis, S. Konitsiotis, and S. Giannopoulos, "EEG transient event detection and classification using association rules," *IEEE Trans. Inf. Technol. Biomed.*, vol. 10, no. 3, pp. 451–457, Jul. 2006.

[70] L. Tarassenko, Y. U. Khan, and M. R. G. Holt, "Identification of inter-ictal spikes in the EEG using neural network analysis," *IEE Proc.-Sci., Meas. Technol.*, vol. 145, no. 6, pp. 270–278, Nov. 1998.

[71] L. Logesparan and E. Rodriguez-Villegas, "A novel phase congruency based algorithm for online data reduction in ambulatory EEG systems," *IEEE Trans. Biomed. Eng.*, vol. 58, no. 10, pp. 2825–2834, Oct. 2011.

[72] P. van Hese, J.-P. Martens, L. Waterschoot, P. Boon, and I. Lemahieu, "Automatic detection of spike and wave discharges in the EEG of genetic absence epilepsy rats from strasbourg," *IEEE Trans. Biomed. Eng.*, vol. 56, no. 3, pp. 706–717, Mar. 2009.

[73] K. Kobayashi, J. Jacobs, and J. Gotman, "Detection of changes of high-frequency activity by statistical time-frequency analysis in epileptic spikes," *Clin. Neurophysiol.*, vol. 120, no. 6, pp. 1070–1077, 2009.

[74] T. Pietilä, S. Vapaakoski, U. Nousiainen, A. Värri, H. Frey, V. Häkkinen, and Y. Neuvo, "Evaluation of a computerized system for recognition of epileptic activity during long-term EEG recording," *Electroencephalogr. Clin. Neurophysiol.*, vol. 90, no. 6, pp. 438–443, 1994.

[75] H. Witte *et al.*, "Use of discrete Hilbert transformation for automatic spike mapping: A methodological investigation," *Med. Biol. Eng. Comput.*, vol. 29, no. 3, pp. 242–248, 1991.

[76] P. Kovesi, "Image features from phase congruency," *J. Comput. Vis. Res.*, vol. 1, no. 3, pp. 1–26, 1999.

[77] T. N. Alotaiby, S. A. Alshebeili, T. Alshawi, I. Ahmad, and F. E. A. El-Samie, "EEG seizure detection and prediction algorithms: A survey," *EURASIP J. Adv. Signal Process.*, vol. 2014, no. 1, p. 183, 2014.

[78] C. Richard, A. Tanenbaum, B. Audit, A. Arneodo, A. Khalil, and W. N. Frankel, "SWDreader: A wavelet-based algorithm using spectral phase to characterize spike-wave morphological variation in genetic models of absence epilepsy," *J. Neurosci. Methods*, vol. 242, pp. 127–140, Mar. 2015.

[79] M. Dümpelmann and C. Elger, "Visual and automatic investigation of epileptiform spikes in intracranial EEG recordings," *Epilepsia*, vol. 40, no. 3, pp. 275–285, 1999.

[80] T. Kalayci and O. Ozdamar, "Wavelet preprocessing for automated neural network detection of EEG spikes," *IEEE Eng. Med. Biol. Mag.*, vol. 14, no. 2, pp. 160–166, Mar. 1995.

[81] H. Goelz, R. D. Jones, and P. J. Bones, "Wavelet analysis of transient biomedical signals and its application to detection of epileptiform activity in the EEG," *Clin. Electroencephalogr.*, vol. 31, no. 4, pp. 181–191, 2000.

[82] Y. Yuan, C. Yang, and J. Si, "The M-Sorter: An automatic and robust spike detection and classification system," *J. Neurosci. Methods*, vol. 210, no. 2, pp. 281–290, 2012.

FATHI E. ABD EL-SAMIE received the B.Sc., (Hons.), M.Sc., and Ph.D. degrees from Menuofia University, Menouf, Egypt, in 1998, 2001, and 2005, respectively. He was a researcher at KACST-TIC in radio frequency and photonics for the e-Society (RFTONICs). Since 2005, he has been a Teaching Staff Member with the Department of Electronics and Electrical Communications, Faculty of Electronic Engineering, Menoufia University. He has co-authored of about 200 papers in international conference proceedings and journals, and five textbooks. His current research interests include image enhancement, image restoration, image interpolation, super-resolution reconstruction of images, data hiding, multimedia communications, medical image processing, optical signal processing, and digital communications. He was a recipient of the Most Cited Paper Award of the *Digital Signal Processing* journal in 2008.

TURKY N. ALOTAIBY received the B.Sc. degree in computer information sciences from King Saud University, Saudi Arabia, in 1992, and the M.Sc. degree in computer information systems and the Ph.D. degree in computer science from the Florida Institute of Technology, USA, in 1998 and in 2004, respectively. He spent three months (scientific trip) with the Montreal Neurological Institute, McGill University, Canada, in 2013. He is currently an Associate Research Professor with the National Center for Artificial Intelligence and Big Data Technology/Communication and Information Technology Institute, King AbdulAziz City for Science and Technology, Saudi Arabia. He has published several papers in conferences and refereed journals. His current research interests include physiological signals processing, pattern recognition, and time series modeling and prediction

MUHAMMAD IMRAN KHALID received the B.E. degree in electrical engineering from UET Lahore in 2003, the M.Sc. degree (Hons.) in systems engineering from PIEAS, Islamabad, in 2006, and the Ph.D. degree from KSU in 2017. Then, he joined the Public Sector Research and Development Organization, where he served for five years as a Senior Engineer. His research interests are statistical digital signal processing and multivariate analysis methods for brain signal processing.

SALEH A. ALSHEBEILI has over 25 years of teaching and research experience in the areas of communications and signal processing. He was a Professor and the Chairman of the Electrical Engineering Department, King Saud University (2001–2005). He has been the Co-Founder and the Director of the Technology Innovation Center, RF, and Photonics for the e-Society (RFTONICS), since 2011, supported by the King Abdulaziz City for Science and Technology (KACST). He has also an active involvement in the review process of a number of research journals, KACST general directorate grants programs, and national and international symposiums and conferences. He is a member of the Board of Directors of the King Abdullah Institute for Research and Consulting Studies (2007–2009), the Board of Directors of the Prince Sultan Advanced Technologies Research Institute (PSATRI) (2008–2017, the Managing Director of PSATRI (2008–2011), and the Director of the Saudi-Telecom Research Chair (2008–2012). He was on the Editorial Board of the *International Journal of Engineering Science*, King Saud University (2009–2012).

SAEED A. ALDOSARI received the B.S. and M.S. degrees in electrical engineering from King Saud University, Riyadh, Saudi Arabia, in 1994 and 2000, respectively, and the Ph.D. degree in electrical and computer engineering from Carnegie Mellon University, Pittsburgh, PA, USA, in 2005. He is currently an Assistant Professor with the Electrical Engineering Department, King Saud University. His research interests include distributed signal processing, sensor networks, artificial intelligence, and MIMO wireless communication systems.