IEICE Communications Express, Vol.13, No.1, 1–4

ComEX

LETTER

Hybrid transmission scheme using FBMC and OFDM under multipath fading channels

Yuki Inoue[1], **Shuhei Saito**[1], **Hirofumi Suganuma**[1], **and Fumiaki Maehara**[1, a)]

Abstract Filter bank multicarrier (FBMC) prevents degradation of transmission efficiency caused by the guard interval (GI). However, the signal-to-interference-plus-noise ratio (SINR) deteriorates owing to inter-symbol interference (ISI) and inter-carrier interference (ICI) in multipath fading channels. On the other hand, orthogonal frequency-division multiplexing (OFDM) can mitigate the effects of ISI by inserting a GI, thereby maintaining an excellent performance. However, the transmission efficiency decreases owing to GI. This study leverages the distinctive properties of both FBMC and OFDM and proposes a hybrid approach that can achieve robust transmission efficiency even in the face of a varying delay spread. In particular, we theoretically calculate the transmission efficiency of FBMC and OFDM based on the instantaneous channel response, choose a transmission method that offers superior efficiency, and ensure high transmission efficiency regardless of the wireless channel conditions. Furthermore, we validate the effectiveness of our proposed method through computer simulations and compare its performance with those of the FBMC-only and OFDM-only approaches.

Keywords: filter bank multicarrier (FBMC), orthogonal frequency-division multiplexing (OFDM), multipath fading, inter-symbol Interference (ISI), inter-carrier interference (ICI), guard interval (GI)

Classification: Wireless communication technologies

1. Introduction

Orthogonal frequency-division multiplexing (OFDM) is the most widely utilized multicarrier technology. It is utilized in several wireless communication applications, such as mobile communications and wireless local area networks, and it is a promising modulation scheme for sixth-generation wireless communication systems [1]. In OFDM, multipath fading can be achieved by inserting a guard interval (GI) suitable for broadband wireless communications [2].

However, an inherent shortcoming of OFDM is the high level of out-of-band (OOB) radiation generated by the rectangular time-domain window [2]. Therefore, wide guard bands that generally occupy approximately 10% of the available bandwidth are required to suppress the impact of interference on adjacent wireless networks. Thus the utilization of OFDM in asynchronous dynamic spectrum access scenarios, such as those involving heterogeneous networks [3], device-to-device communications [4], cognitive radio [5], and television white spaces [6], is not always suitable.

To overcome these drawbacks, the filter bank multicarrier (FBMC) technique has attracted considerable attention as a feasible alternative to OFDM. Its operation is based on the offset quadrature amplitude modulation (OQAM) and pulse shaping of each subcarrier. This inhibits the generation of OOB radiation, while maintaining symbol orthogonality [2, 3, 4, 7]. Accordingly, FBMC is considered a promising technique to realize asynchronous access in the 5G era [3, 4].

In addition, FBMC does not require GI insertion even in a multipath fading environment [2]; therefore, the decrease in transmission efficiency caused by GI can be avoided. However, FBMC is more susceptible to inter-symbol and inter-carrier interference (ISI and ICI, respectively) owing to multipath fading [8, 9, 10], resulting in degraded signal-to-interference-plus-noise ratio (SINR) compared with OFDM [11]. Therefore, high-efficiency multicarrier transmission is expected to be realized by leveraging the characteristics of FBMC and OFDM because the superior transmission efficiency of FBMC and OFDM varies depending on the degree of multipath fading.

Consequently, we propose a hybrid approach that combines FBMC and OFDM based on the theoretical transmission efficiency under multipath fading channels. In particular, we utilize previously proposed theoretical formulas for the system capacity of the FBMC and OFDM [11]. By utilizing these formulas, we calculated the system capacities of both transmission methods for the instantaneous channel response. Among these, we selected a transmission method with superior system capacity to achieve high transmission efficiency. Furthermore, we assessed the effectiveness of the proposed approach through computer simulations and compared it with scenarios in which FBMC or OFDM were applied individually.

2. Proposed Scheme

The difference between FBMC and OFDM is shown in Fig. 1(a), according to which, in multipath fading channels FBMC suffers from transmission performance degradation owing to ISI and ICI; however, it is not influenced by overhead owing to GI. In contrast, although OFDM can maintain good performance without the influence of ISI by inserting GI, the transmission efficiency deteriorates because of GI. The influence of different delay spreads on the system capacity is shown in Fig. 1(b), according to which, in FBMC, the effects of ISI and ICI worsen with an increase in the delay spread τ_{rms}, and the transmission characteristics deterio-

[1] Graduate School of Fundamental Science and Engineering, Waseda University, 3–4–1 Ohkubo, Shinjuku-ku, Tokyo 169–8555, Japan

[a)] fumiaki_m@waseda.jp

DOI: 10.23919/comex.2023XBL0125
Received September 25, 2023
Accepted October 18, 2023
Publicized November 10, 2023
Copyedited January 1, 2024

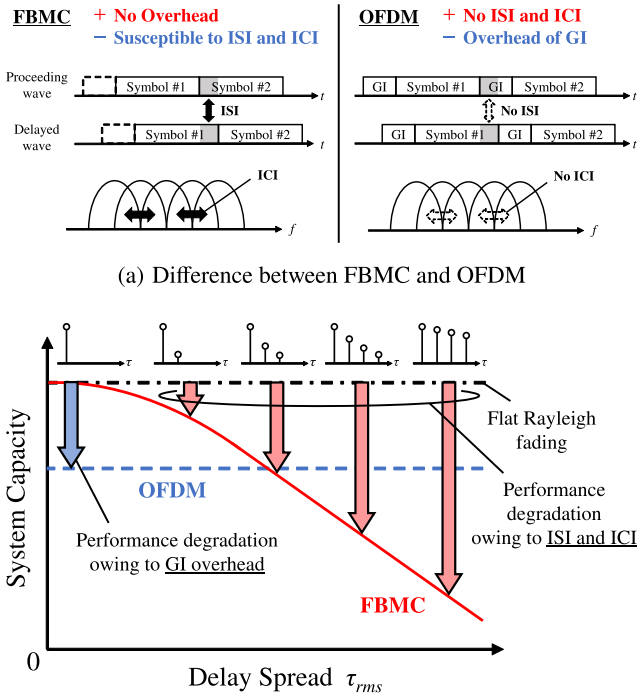

(a) Difference between FBMC and OFDM

(b) Influence of different delay spreads on the system capacity

Fig. 1 Concepts of FBMC and OFDM.

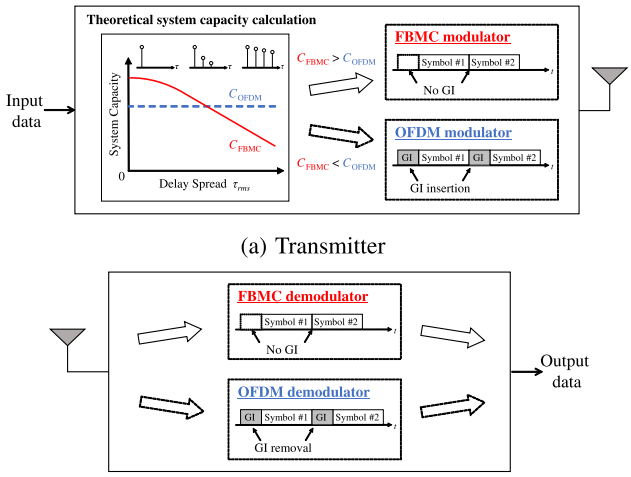

(a) Transmitter

(b) Receiver

Fig. 2 Concept of the proposed approach.

rate. However, when τ_{rms} is small, the impact of improving transmission efficiency achieved by the non-utilization of GI outweighs the degradation caused by ISI and ICI, resulting in better system capacity compared with OFDM [11]. Therefore, we propose a hybrid method of FBMC and OFDM that capitalizes on these properties of FBMC and OFDM.

An overview of the proposed approach is shown in Fig. 2, according to which, the proposed method calculates the theoretical system capacity of the FBMC and OFDM based on the instantaneous channel response and selects a transmission method with superior system capacity. Consequently, when the delay spread τ_{rms} is small, FBMC that does not incur overhead owing to GI, is selected. Conversely, when τ_{rms} is large, OFDM which can suppress ISI and ICI, is selected. Accordingly, the proposed approach enables the

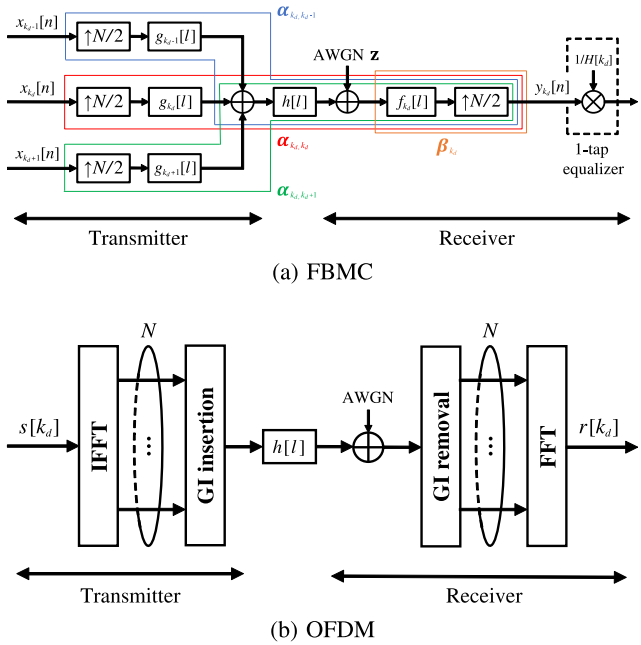

(a) FBMC

(b) OFDM

Fig. 3 System configuration in each transmission scheme.

appropriate selection of FBMC and OFDM depending on the impact of multipath fading. This, in turn, allows for the achievement of high transmission efficiency regardless of the wireless channel conditions.

Next, we introduce the derivation method for the system capacity of FBMC, OFDM, and the proposed approach for multipath fading channels. The configuration of the FBMC system is shown in Fig. 3(a). In FBMC, filtering processing is performed on each subcarrier. Therefore, suppose the interval from a certain subcarrier is at least two, then the influence of interference from that subcarrier can be ignored [2, 7, 12]. Hence, the received OQAM symbol can be approximated by focusing on the central subcarrier k_d and its two neighboring subcarriers $k_d \pm 1$ as [8, 9]

$$y_{k_d}[n] \approx \sum_{j=-1}^{1} \boldsymbol{\alpha}_{k_d,k_d+j}\, \mathbf{x}_{k_d+j} + \boldsymbol{\beta}_{k_d} \mathbf{z}, \tag{1}$$

where $\mathbf{x}_{k_d+j} \in \mathbb{C}^{L_g}$ and $\mathbf{z} \in \mathbb{C}^{KN+1}$ are the transmitted OQAM symbol and noise, respectively; $\boldsymbol{\alpha}_{k_d,k_d+j} = \left[\alpha_{k_d,k_d+j}[0], \alpha_{k_d,k_d+j}[1], \cdots, \alpha_{k_d,k_d+j}[L_g-1]\right] \in \mathbb{C}^{1\times L_g}$ is an impulse response vector consisting of the transmit filter $g_{k_d+j}[l]$, receive filter $f_{k_d}[l]$, and multipath fading channel $h[l]$, while $\boldsymbol{\beta}_{k_d} = \left[f_{k_d}[0], f_{k_d}[1], \cdots, f_{k_d}[KN]\right] \in \mathbb{C}^{1\times(KN+1)}$ is an impulse response vector of the receive filter. Here, K is the overlap factor of the transmit and receive filters. In this study, we assume the one-tap equalization method for multipath fading in FBMC and derive the system capacity. The OQAM symbol received after one-tap equalization is given as

$$\frac{y_{k_d}[n]}{H[k_d]} \approx \sum_{j=1}^{1} \frac{\boldsymbol{\alpha}_{k_d,k_d+j}\, \mathbf{x}_{k_d+j}}{H[k_d]} + \frac{\boldsymbol{\beta}_{k_d} \mathbf{z}}{H[k_d]}, \tag{2}$$

where $H[k_d]$ denotes the channel frequency response. By using Eq. (2), the average desired signal power $\overline{P}_d$, ISI power $\overline{P}_{i_{\mathrm{ISI}}}$, ICI power $\overline{P}_{i_{\mathrm{ICI}}}$, and noise power $\overline{P}_n$ are calculated as

[11]

$$\overline{P}_d = \frac{\sigma_s^2}{2}\left|\mathrm{Re}\left(\frac{\alpha_{k_d,k_d}[L_g/2]}{H[k_d]}\right)\right|^2, \tag{3}$$

$$\overline{P}_{i_{\mathrm{ISI}}} = \frac{\sigma_s^2}{2}\left(\sum_{\substack{i=0\\ i\neq L_g/4}}^{L_g/2-1}\left|\mathrm{Re}\left(\frac{\alpha_{k_d,k_d}[2i]}{H[k_d]}\right)\right|^2 + \sum_{i=0}^{L_g/2-1}\left|\mathrm{Im}\left(\frac{\alpha_{k_d,k_d}[2i+1]}{H[k_d]}\right)\right|^2\right), \tag{4}$$

$$\overline{P}_{i_{\mathrm{ICI}}} = \frac{\sigma_s^2}{2}\sum_{\substack{j=-1\\ j\neq 0}}^{1}\sum_{i=0}^{L_g/2-1}\left(\left|\mathrm{Im}\left(\frac{\alpha_{k_d,k_d+j}[2i]}{H[k_d]}\right)\right|^2 + \left|\mathrm{Re}\left(\frac{\alpha_{k_d,k_d+j}[2i+1]}{H[k_d]}\right)\right|^2\right), \tag{5}$$

$$\overline{P}_n = \frac{\sigma_n^2}{2}\sum_{l=0}^{KN}\left|\frac{f_{k_d}[l]}{H[k_d]}\right|^2, \tag{6}$$

where σ_s^2 and σ_n^2 are the transmit and noise powers, respectively, and $L_g/2$ is the filter delay. Therefore, the SINR of the FBMC is represented by

$$\gamma_{\mathrm{FBMC},k_d} = \frac{\overline{P}_d}{\overline{P}_{i_{\mathrm{ISI}}} + \overline{P}_{i_{\mathrm{ICI}}} + \overline{P}_n}. \tag{7}$$

Consequently, the system capacity of FBMC under multipath fading channels is expressed as

$$C_{\mathrm{FBMC}} = \frac{1}{N}\sum_{k_d=1}^{N}\log_2\left(1+\gamma_{\mathrm{FBMC},k_d}\right) \quad [\mathrm{bps/Hz}]. \tag{8}$$

Figure 3(b) shows the configuration of the OFDM system. In OFDM, the received signal of subcarrier k_d can be expressed as

$$r[k_d] = \frac{H[k_d]\,s[k_d] + n[k_d]}{H[k_d]}, \tag{9}$$

where $s[k_d]$ and $n[k_d]$ are the transmit signal and noise, respectively. Thus, the signal-to-noise ratio (SNR) of OFDM is calculated as

$$\gamma_{\mathrm{OFDM},k_d} = |H[k_d]|^2\,\frac{\sigma_s}{\sigma_n}. \tag{10}$$

Consequently, the system capacity of OFDM considering the GI overhead can be expressed as

$$C_{\mathrm{OFDM}} = \frac{T_s}{T_s+T_G}\cdot\frac{1}{N}\sum_{k_d=1}^{N}\log_2\left(1+\gamma_{\mathrm{OFDM},k_d}\right) \quad [\mathrm{bps/Hz}], \tag{11}$$

where T_s and T_G denote the symbol and GI lengths, respectively.

Using Eqs. (8) and (11), the system capacity of the proposed method C_{prop} can be expressed as

$$C_{\mathrm{prop}} = \max\left(C_{\mathrm{FBMC}}, C_{\mathrm{OFDM}}\right) \quad [\mathrm{bps/Hz}]. \tag{12}$$

3. Numerical results

This section evaluates the system capacity of the proposed method by comparing it with the cases in which FBMC or OFDM are applied individually. The simulation parameters utilized in this study are listed in Table I. In our evaluation, we assumed that the number of subcarriers N is 256 and the average carrier-to-noise ratio (CNR) Γ is 20 dB or 30 dB.

Table I Simulation parameters

Number of subcarriers N	256
Prototype filter in FBMC	Mirabbasi-Martin filter
Overlapping factor K	4
GI length in OFDM T_G	$32T_{sam}$
Channel model	32-ray exponentially decaying Rayleigh fading
Average CNR Γ	20 dB, 30 dB

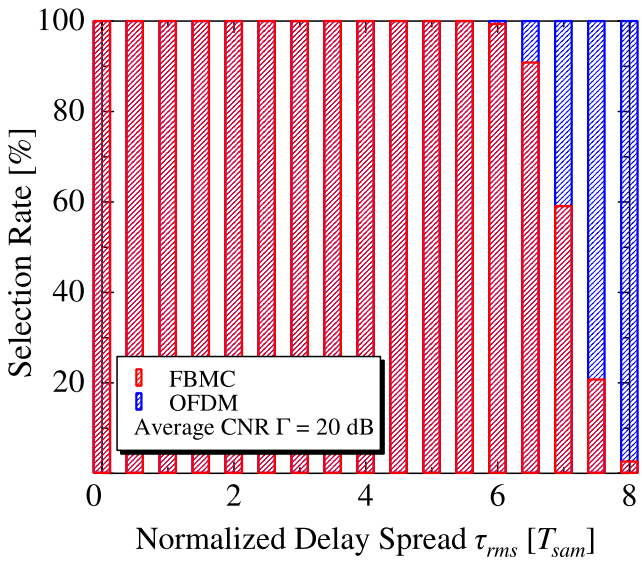

(a) Γ = 20 dB

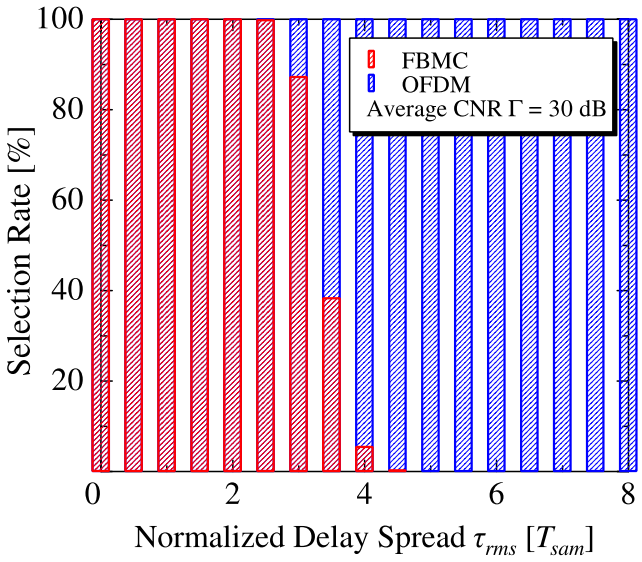

(b) Γ = 30 dB

Fig. 4 Selection rates of the FBMC and OFDM in the proposed approach.

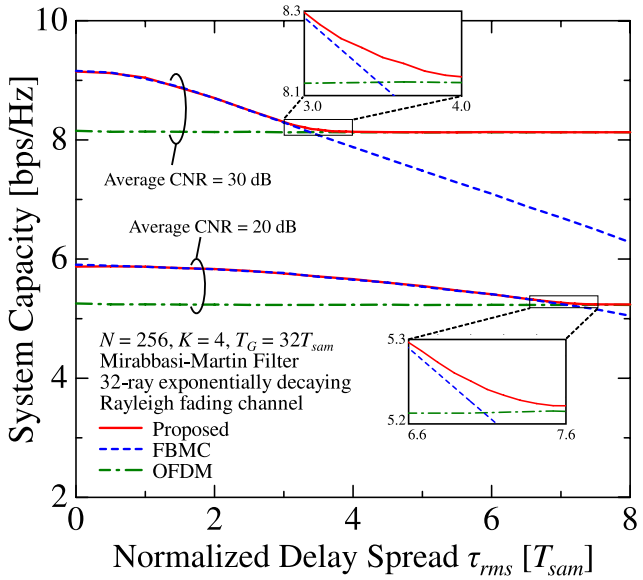

Fig. 5 System capacity versus normalized delay spread τ_{rms}.

In addition, in OFDM, the GI overhead was 12.5%. The maximum multipath delay time did not exceed GI length $T_G = 32T_{sam}$, and hence, ISI did not occur. However, in FBMC, a Mirabbasi-Martin filter [7] with an overlapping factor $K = 4$ was utilized.

The selection rates of the FBMC and OFDM in the proposed approach are shown in Fig. 4, according to which the selection rate of FBMC decreased, whereas the selection rate of OFDM increased with an increase in the normalized delay spread τ_{rms}. This is because FBMC, which does not require a GI and is less impacted by ISI and ICI, has an advantage when τ_{rms} is small. Conversely, when τ_{rms} is large, OFDM, which can suppress ISI and ICI, has an advantage. Additionally, as shown in Fig. 4, a lower average CNR Γ results in a higher selection rate for FBMC. This is because, with smaller Γ, the effect of noise dominates, causing the relative impacts of ISI and ICI to decrease, and making FBMC more effective.

The system capacity versus normalized delay spread τ_{rms} is shown in Fig. 5, according to which, the system capacity of the proposed approach is superior compared to the case in which FBMC or OFDM is utilized individually. Particularly, in cases in which the selection rates of FBMC and OFDM are equal, such as $\tau_{rms} = 7T_{sam}$ ($\Gamma = 20$ dB) or $3.5T_{sam}$ ($\Gamma = 30$ dB), as shown in Fig. 4, the system capacity of the proposed approach is better owing to the balance between GI overhead and the impact of ISI and ICI.

4. Conclusion

This study proposed a hybrid approach that combined FBMC and OFDM to maintain robust system capacity in multipath fading channels by utilizing a theoretical system capacity based on instantaneous channel response. The proposed approach theoretically calculated the system capacity of the FBMC, considering the degradation in the SINR owing to ISI and ICI, as well as OFDM, considering the reduction in transmission efficiency caused by the GI. Furthermore, it selected the transmission method with the superior system capacity. Based on the results of the performance evaluation, the proposed approach could appropriately select a transmission method with superior system capacity, regardless of the delay spread or average CNR. Thus, the proposed approach could improve the system capacity compared with the FBMC-only or OFDM-only approach. Notably, in scenarios with a moderate delay spread, where the impact of GI and ISI/ICI interference is balanced, the system capacity of the proposed approach outperformed the FBMC-only and OFDM-only approaches.

References

[1] R.V. Nee and R. Prasad, *OFDM for Wireless Multimedia Communications*, Artech House, 2000.

[2] B. Farhang-Boroujeny, "OFDM versus filter bank multicarrier," *IEEE Signal Process. Mag.*, vol. 28, no. 3, pp. 92–112, May 2011. DOI: 10.1109/msp.2011.940267

[3] G. Wunder, P. Jung, M. Kasparick, T. Wild, F. Schaich, Y. Chen, S.T. Brink, I. Gaspar, N. Michailow, A. Festag, L. Mendes, N. Cassiau, D. Kténas, M. Dryjanski, S. Pietrzyk, B. Eged, P. Vago, and F. Wiedmann, "5GNOW: Non-orthogonal, asynchronous waveforms for future mobile applications," *IEEE Commun. Mag.*, vol. 52, no. 2, pp. 97–105, Feb. 2014. DOI: 10.1109/mcom.2014.6736749

[4] C. Sexton, Q. Bodinier, A. Farhang, N. Marchetti, F. Bader, and L.A. DaSilva, "Coexistence of OFDM and FBMC for underlay D2D communication in 5G networks," Proc. 2016 IEEE Globecom Workshops (GC Wkshps), pp. 1–7, Dec. 2016. DOI: 10.1109/glocomw.2016.7848863

[5] H.A. Mahmoud, T. Yucek, and H. Arslan, "OFDM for cognitive radio: Merits and challenges," *IEEE Wireless Commun.*, vol. 16, no. 2, pp. 6–15, April 2009. DOI: 10.1109/mwc.2009.4907554

[6] S. Filin, D. Noguet, J.-B. Dore, B. Mawlawi, O. Holland, M.Z. Shakir, H. Harada, and F. Kojima, "IEEE 1900.7 standard for white space dynamic spectrum access radio systems," *IEEE Commun. Mag.*, vol. 56, no. 1, pp. 188–192, Jan. 2018. DOI: 10.1109/mcom.2018.1600199

[7] A. Viholainen, M. Bellanger, and M. Huchard, "WP5: Prototype filter and filter bank structure," ICT-211887, PHYDYAS D5.1, Jan. 2009.

[8] D.S. Waldhauser, L.G. Baltar, and J.A. Nossek, "MMSE subcarrier equalization for filter bank based multicarrier systems," Proc. IEEE 9th Workshop Signal Process. Adv. Wireless Commun. (SPAWC 2008), pp. 525–529, July 2008. DOI: 10.1109/spawc.2008.4641663

[9] C.-W. Chen and F. Maehara, "An enhanced MMSE subchannel decision feedback equalizer with ICI suppression for FBMC/OQAM systems," Proc. 2017 Int. Conf. Comput., Netw. Commun. (ICNC), pp. 1041–1045, Jan. 2017. DOI: 10.1109/iccnc.2017.7876278

[10] H. Tabata, H. Suganuma, and F. Maehara, "Impact of adjacent-channel interference on transmission performance in asynchronous FBMC/OFDM systems," *IEICE Commun. Express*, vol. 10, no. 4, pp. 186–192, April 2021. DOI: 10.1587/comex.2020xbl0183

[11] H. Yamada, H. Suganuma, and F. Maehara, "System capacity analysis of asynchronous FBMC and OFDM systems in the presence of adjacent channel interference and multipath fading," Proc. 2022 IEEE Radio Wireless Symp. (RWS 2022), pp. 171–173, Jan. 2022. DOI: 10.1109/rws53089.2022.9719951

[12] Y. Medjahdi, M. Terré, D.L. Ruyet, and D. Roviras, "Interference tables: A useful model for interference analysis in asynchronous multicarrier transmission," *EURASIP J. Adv. Signal Process.*, vol. 2014, no. 1, pp. 1–17, April 2014. DOI: 10.1186/1687-6180-2014-54